SERVICE MANUAL

2031 DISK DRIVE

HIGH AND LOW PROFILE MODELS

DEC. 1985 PN-314011-01

commodore
COMPUTERS

commodore
COMPUTERS

Computer Systems Division
1200 Wilson Drive
West Chester, PA 19380

SERVICE MANUAL

2031 DISK DRIVE

HIGH AND LOW PROFILE MODELS

DEC. 1985 **PN–314011-01**

Commodore Business Machines, Inc.
1200 Wilson Drive, West Chester, Pennsylvania 19380 U.S.A.

Commodore makes no expressed or implied warranties with regard to the information contained herein. The information is made available solely on an as is basis, and the entire risk as to quality and accuracy is with the user. Commodore shall not be liable for any consequential or incidental damages in connection with the use of the information contained herein. The listing of any available replacement part herein does not constitute in any case a recommendation, warranty or guaranty as to quality or suitability of such replacement part. Reproduction or use without expressed permission, of editorial or pictorial content, in any matter is prohibited.

This manual contains copyrighted and proprietary information. No part of this publication may be reproduced, stored in a retrieval system, or transmitted in any form or by any means, electronic, mechanical, photocopying, recording or otherwise, without the prior written permission of Commodore Electronics Limited.

Copyright © 1985 by Commodore Electronics Limited.
All rights reserved.

CONTENTS

Title	Page
SPECIFICATIONS	1
BLOCK DIAGRAM	2
CARE AND MAINTENANCE	3
DEVICE NUMBER CHANGE	3
OVERVIEW	4
FLASH CODE	4
CASEWORK/ACCESSORY PARTS LIST	5
TROUBLESHOOTING GUIDE	6
HIGH PROFILE	
BOARD LAYOUT	8
PCB PARTS LIST	9
UPGRADE NOTES	10
CIRCUIT THEORY	11
SCHEMATIC	11
POWER SUPPLY PARTS & WIRING DIAGRAM	15
SHUGART DRIVE PARTS	16
RESISTANCE CHECKS	17
SERVO BOARD PARTS	18
COMPONENT LOCATION & SCHEMATIC	18
LOW PROFILE	
CIRCUIT THEORY	19
PCB PARTS LIST	29
BOARD LAYOUT	30
SCHEMATIC	30
POWER SUPPLY PARTS & WIRING DIAGRAM	31
ALPS DRIVE RESISTANCE CHECKS	32
PARTS	33
WIRING DIAGRAM	33
SERVO BOARD PARTS & SCHEMATIC	34

2031 DISK DRIVE
PRODUCT SPECIFICATION

GENERAL DESCRIPTION	The 2031 is a single drive, 5-1/4 inch floppy, disk unit. It uses a 35 track, 48 TPI, single headed drive: High profile — Shugart drive assembly Low profile — Alps drive assembly It is an intelligent device, containing its own microprocessor, RAM, ROM and operating systems software.
MAXIMUM STORAGE	170K of data (formatted) — 35 tracks
MEDIA	5-1/4 inch floppy disk. Single sided, single density, soft sectored (double density can be used, but not needed).
INPUT/OUTPUT	IEEE interface
CONTROLLER	MOS 6502 microprocessor — 1 MHz clock
MEMORY	2K RAM, 16K ROM
DATA TRANSFER RATE	Internal 40K Bytes/sec IEEE-488 Bus 1.2K Bytes/sec
FILE TYPES	Program, sequential, relative, random-access and user
COMPUTERS	PET, 4000 series, 8000 series, B128
MEDIA COMPATIBILITY	1541, 4040
POWER REQUIREMENTS	120 Volts AC, 60Hz — integral power supply with external 1 Amp fuse
POWER CONSUMPTION	40 Watts maximum

BLOCK DIAGRAM

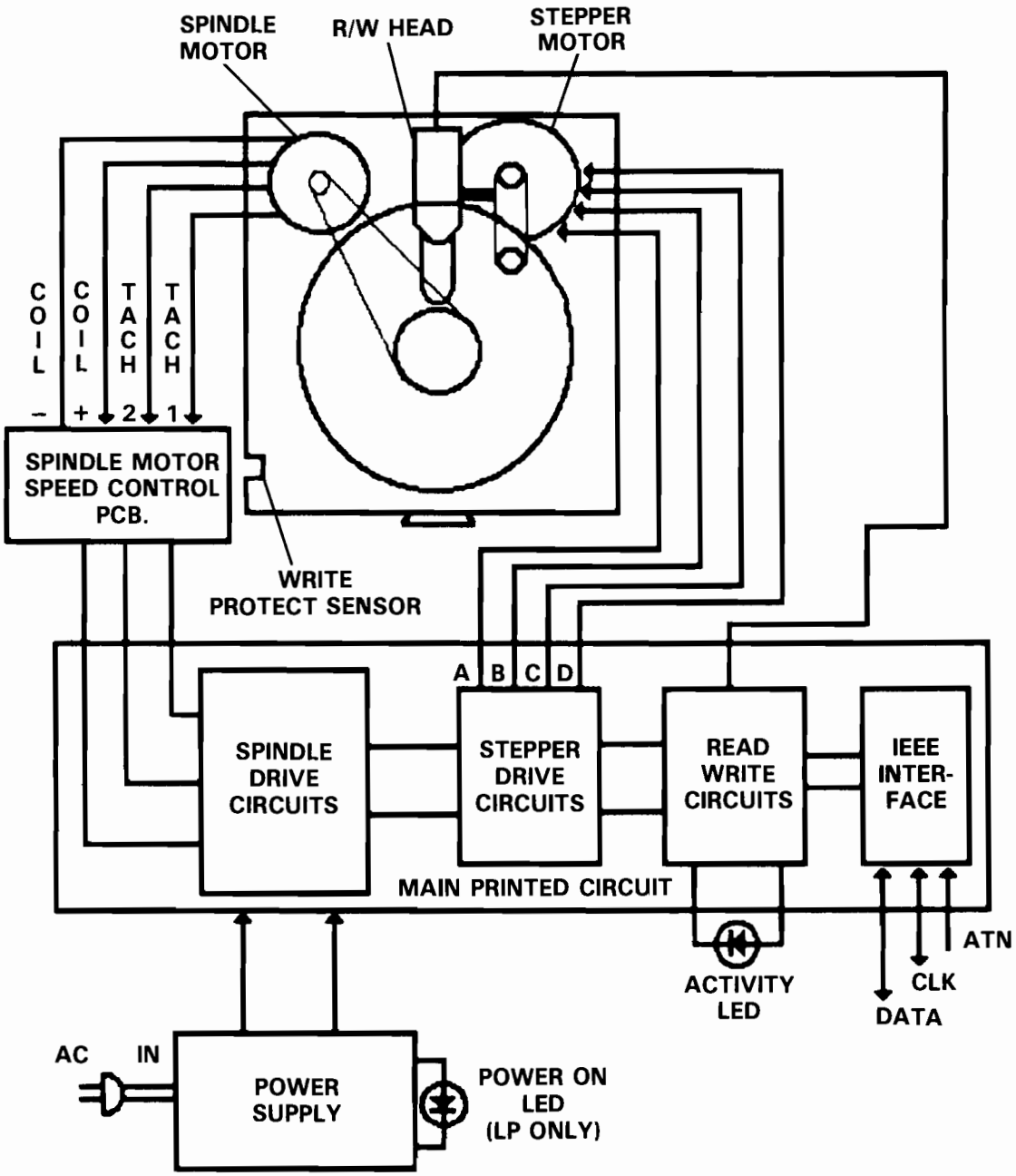

CARE AND MAINTENANCE

- DO NOT use MAGNETIZED tools when repairing or adjusting a disk drive.
- DO NOT place a disk drive near any device which generates "noise" e.g., — motors, radios, televisions.
- DO NOT stack drives upon each other or in any way inhibit air flow around the unit. HEAT BUILD-UP can cause disk failures.
- Periodically CLEAN the read/write head with 90% isopropyl alcohol and a cotton swab. CHECK load pad for excess wear. Clean or replace as necessary.
- Take the following precautions when handling a diskette:
  ALWAYS store a diskette in its jacket.
  Use ONLY felt-tip pens when writing on the label of a diskette.
  Do not bend or physically damage a diskette.
  Do not place a diskette in the area of a magnetic field.
  Do not attempt to clean a diskette.
  Do not touch the exposed area of a diskette.

DIAGNOSTIC and ADJUSTMENT procedures for the 2031 are outlined in detail in the Version 3.0 diagnostic package (Commodore Part #31405201). This Kit contains a manual that outlines testing, adjustment and alignment procedures and Version 3.0 and 3.5 diagnostic program disks.

DEVICE NUMBER CHANGE

The 2031 drive is shipped from the factory set for device #8. The channel may be hardware altered to device #9, 10 or 11. Channel selection is changed on the main logic board by LIFTING the diodes at locations CR 17/18 and/or CR 19. The following chart indicates the selected device #:

ADDRESS	LOW PROFILE	HIGH PROFILE
9	CR 19	CR 19
10	CR 17	CR 18
11	CR 19 & 17	CR 19 & 18

The diode locations are indicated on the appropriate schematic.

OVERVIEW

The drive is itself an independent memory device. The drive is composed of a media clamp rotating mechanism, a head positioning mechanism and an eject mechanism. All positioning operations, excluding insertion and removal of the diskette, are controlled by the internal guide mechanism. Closing the front door causes the media clamp mechanism to operate. Two operations are performed in the following order:

a) The diskette is centered.

b) The diskette is clamped and retained between the spindle and the hub.

The spindle and hub rotate at 300 r.p.m. through a closed-loop control circuit employing a D.C. motor/tachometer. It is important that the relationship between the head and the media is maintained correctly during operation. For this purpose, a pressure pad is used to hold and press down the media (about 12g) from the opposite side of the head. This head assembly is coupled to a four phase stepping motor which performs the track positioning. One step of the stepping motor corresponds to a 1/2 track movement. The control circuit on the logic board selects the direction and number of steps to the desired track.

The Read/Write head uses a glass-bonded, ferrite/ceramic head. Track-to-track erasing is accomplished by the straddle erase method. The surface of the Read/Write head is mirror-ground to minimize wear of the head and media. Also, the head is designed in such a way that the maximum signal can be obtained from the media surface.

The spindle drive motor operates on 12VDC and turns the spindle, through a belt drive, at 300 revolutions per minute. The speed of the drive motor is controlled by a feedback signal from a tachometer, which is housed in the drive motor assembly. The feedback signal controls a servo amp that supplies the 12VDC drive current.

FLASH CODE

The 2031, upon power-up, goes through its own internal diagnostic. If an electronic problem is detected, it is indicated by a FLASH CODE. The LED's will blink a set number of times, pause, and then flash again until the problem is corrected.

Number of Flashes	Possible Failure
1	Zero Page
2, 3	DOS ROM's
4	RAM

Circuitry associated with these components can also cause the failure code. Therefore, it should be suspected as the next possible defect.

CASEWORK/ACCESSORY PARTS LIST

2031 LOW PROFILE (PLASTIC CASEWORK)

2031 TOP CASE (IVORY)	C 1540014-05
1540/41/2031 BOTTOM CASE (IVORY)	C 1540015-00
SHIELD COVER	1540013-01
LED ASSEMBLY	1540003-01
SELF ADHESIVE FOOT	C 950150-02
POWER CORD	C 903508-04
USER'S MANUAL	C 1540042-01

2031 HIGH PROFILE (METAL CASEWORK)

REPLACEMENT CASEWORK FOR METAL UNITS IS NO LONGER AVAILABLE.

POWER CORD	C 903501-01
USER'S MANUAL	C 2031036-01
DEMO DISKETTE	C 1540041-01
IEEE TO IEEE INTERFACE CABLES	C 905080-01
PET TO IEEE INTERFACE CABLES	C 320101-01

TROUBLESHOOTING GUIDE

NOTE: Always check for latest ROM/ECO upgrade. If socketed IC is suspected bad, be sure to check socket with ohmmeter.

SYMPTOM:	POSSIBLE SOLUTION:
No LED's on power up.	Is Power cord plugged into wall outlet correctly? Is Power cord plugged into the disk drive correctly? Check line fuse. Check power switch. Check clock on 6502 pin 37. Check +5 and +12 volt lines.
Error LED flashes on power up.	Check all RAM and ROM locations.
Error LED stays on all the time.	Check 6502 microprocessor. Check ROMs.
Drive motor runs continuously and red LED stays on.	Check +12V. Check 6502, logic gates.
Drive motor runs continuously and red LED stays off.	Check ROM Check drive motor PCB.
Drive motor runs continuously.	Check VR2 (5V Regulator). Check Power Transformer.
After the drive warms up the motor runs continuously.	Check 6522s. Check motor control PCB.
Loads programs with red LED flashing.	Check drive speed. Check stepper motor.
Loading is intermittent.	Check ROMs. Check drive alignment.
Does not load when hot or LED flashed 3 times.	Check ROMs.
Searches with LED flashing continuously.	Check ROMs.
Searching with no red LED.	Check 6522s, logic gates.
Message of 'FILE NOT FOUND' is displayed.	Clean drive head w/alcohol. Check Ø stop adjustment. Check alignment.
Drive fails to read.	Check the 311, 9602, and 592s. There are two +12 volt sources for stepper output and read circuit, make sure both are good.

TROUBLESHOOTING GUIDE (Continued)

SYMPTOM:	POSSIBLE SOLUTION:
Fails to format disk.	Check components related to connector P7. Check 6522s. Check write circuits.
Stepper Motor does not step forward.	Check 6502, 6522s, stepper logic.
Drive speed will not stabilize.	Check DC motor.
Will not save when the drive heats up.	Check 6502 microprocessor.
Locks-up when loading.	Check IEEE interface components. Check ROM.
Fails the performance test and displays a 21 read error.	Check test diskette. Check Drive Motor.
Fails the performance test and displays a 27 read error.	Check stop adjust.
Passes performance test to track 18 then displays 21 read errors.	Check read/write head.
Passes the performance test but will not load certain programs.	Check stepper motor.

HIGH PROFILE

PCB ASSEMBLY #2031040
BOARD LAYOUT

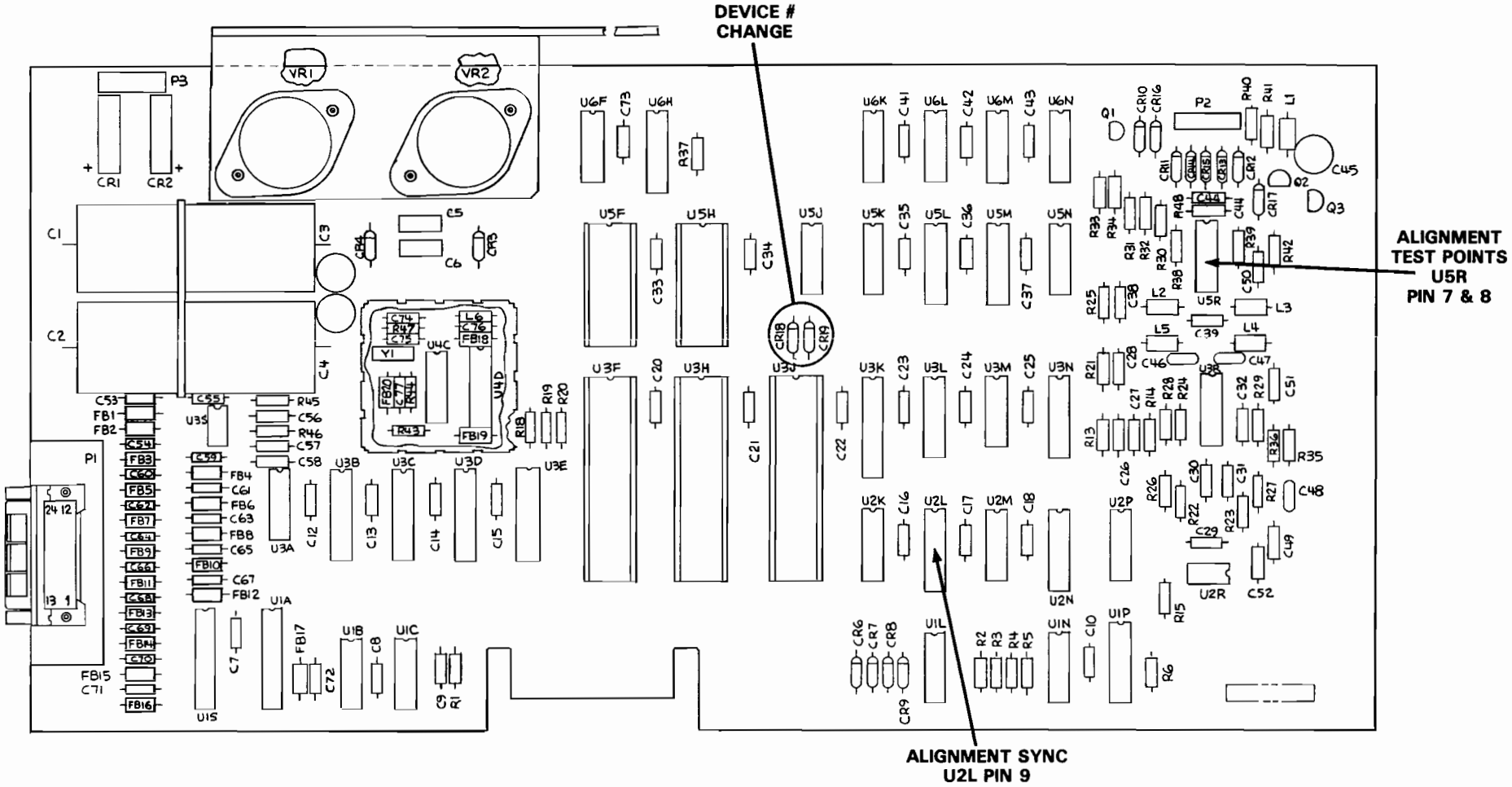

PARTS LIST
PCB ASSEMBLY #2031040-01

PLEASE NOTE:
Commodore part numbers are provided for reference only and do not indicate the availability of parts from Commodore. Industry standard parts (Resistors, Capacitors, Connectors) should be secured locally. Approved cross-references for TTL chips, Transistors, etc. are available in manual form through the Service Department, order part #314000-01. Unique or non-standard parts will be stocked by Commodore and are indicated on the parts list by a "C". Vendor Name and part number have been provided for your convenience in ordering custom or unique parts.

INTEGRATED CIRCUITS

U1A	75161 Transceiver	901494-01
U1B	74LS14	901521-30
U1C	7406	901522-06
U1N	7406	901522-06
U1P	74LS139	901521-18
U1S	75160 Transceiver	901493-01
U2K	74LS164	901521-28
U2L	74LS133	901521-15
U2M	74LS02	901521-21
U2N	74LS193	901521-26
U2P	74LS86	901521-32
U2R	311 OP Amp	901523-04
U3A	74LS04	901521-02
U3B,C,D,E	2114 Static RAM	901453-04
U3F	6502 Microprocessor	C 901435-01
U3H	6522	C 901437-01
U3J	6522	C 901437-01
U3K	74LS245	901521-46
U3L	74LS165	901521-12
U3M	74LS74	901521-06
U3N	9602 One Shot	901510-01
U3R	592	901523-08
U3S	555 Timer	901523-01
U4C	7400	901522-04
U4D	74LS193	901521-26
U5F	2364 ROM	C 901484-05
U5H	2364 ROM	C 901484-03
U5J	74LS04	901521-02
U5K	74LS00	901521-01
U5L	74LS191	901521-40
U5M	74LS193	901521-26
U5N	74LS74	901521-06
U5R	592	901523-08
U6F	74LS04	901521-02
U6H	74LS42	901521-17
U6K	74LS10	901521-24
U6L	74LS04	901521-02
U6M	74LS00	901521-01
U6N	7406	901522-06

TRANSISTORS

Q1	2N4401
Q2	2N4400
Q3,4,5	2N4403

DIODES

CR1	1.5 A, 50V, Bridge Rectifier	900756-01
CR2	4 A, 200V, Bridge Rectifier	900755-01
CR3,4	1N4005	
CR6-9	1N4005	
CR10	1N5231, 5.1 V Zener	
CR11-16	1N4148	
CR17	1N5226B, 13.3 V Zener	
CR18,19	Germanium 1N270	

RESISTORS — All Values are in ohms- 1/4 W 5% unless noted otherwise.

R1	2K	R31,32	1.5K
R2-5	150	R33	1K
R6	680	R34	680
R13	5.1K	R35,36	220
R14	330	R37	2K
R15	510	R38,39	9.09K, 1/4 W, 1%
R18-20	2K	R40	1K
R21	22K	R41	180
R22,23	470	R42	270
R24	430	R43	47
R25	330	R44	2.2K
R26,27	2.2K	R45,46	1M
R28,29	150	R47	4.7K
R30	300	R48	6.19K, 1/4 W, 1%

CAPACITORS

C1,2	Low Leak Elect	4700μF, 25V
C3,4	Low Leak Elect	47μF, 16V
C5,C6	Low Leak Elect	1μF, 50V
C7-10	Ceramic	.1μF, 50V
C12-18	Ceramic	.1μF, 50V
C20-25	Ceramic	.1μF, 50V
C26	Ceramic	22pF, 50V
C27	Ceramic	750 pF, 50V
C28,29	Ceramic	330 pF, 50V
C30,31	Ceramic	.022μF, 50V
C32	Ceramic	1000 pF, 50V
C33-37	Ceramic	.1μF, 50V
C38,39	Ceramic	750 pF, 50V
C41-44	Ceramic	.1μF, 50V
C45	Low Leak Elect	10μF, 25V
C46,47	Low Leak Elect	.47μF, 50V
C48	Tantalum	3.3μF, 35V
C49-52	Ceramic	.1μF, 50V
C53-54	Ceramic	47 pF
C55,56	Ceramic	.1μF, 50V
C57	Ceramic	1.0μF, 50V
C58	Ceramic	.01μF, 50V
C59-71	Ceramic	47 pF
C72,73	Ceramic	.1μF, 50V
C74	Ceramic	100 pF
C75	Ceramic	220 pF
C76	Ceramic	.047μF
C77	Ceramic	47 pF

MISCELLANEOUS

P1	RT Angle CNNCT IEEE	903206-01
P2	Header — R/W Head CNNCT	
P3	Header — PWR CNNCT	
L1-3	Choke 100μH	
L4,5	Choke 22μH	
L6	Inductor 2.2μH	
VR1	Voltage Regulator LM323	
VR2	Voltage Regulator LM340	
Y1	Crystal 16 MHz	900556-02
	Shield Box	4022048-01
	Shield Cap	4022047-01

2031 HP
UPGRADE NOTES

A design error was present in the original 2031 High Profile Single Disk Drive. The write circuit was modified to correct the problem, however, it is possible that some units still need to be revised.

Revision to correct write circuit:

1. Lift Diodes, CR13 & CR15 as shown.
2. Install Transistors, solder the Collector Lead to Diodes.
3. Solder the Center Leads of Transistors together, to R40 Resistor as shown. (Use 20 AWG wire for mechanical strength.)
4. Solder Emitter Leads to feed thru.
5. Change R31 & R32 from 2.7KΩ to 1.5KΩ.

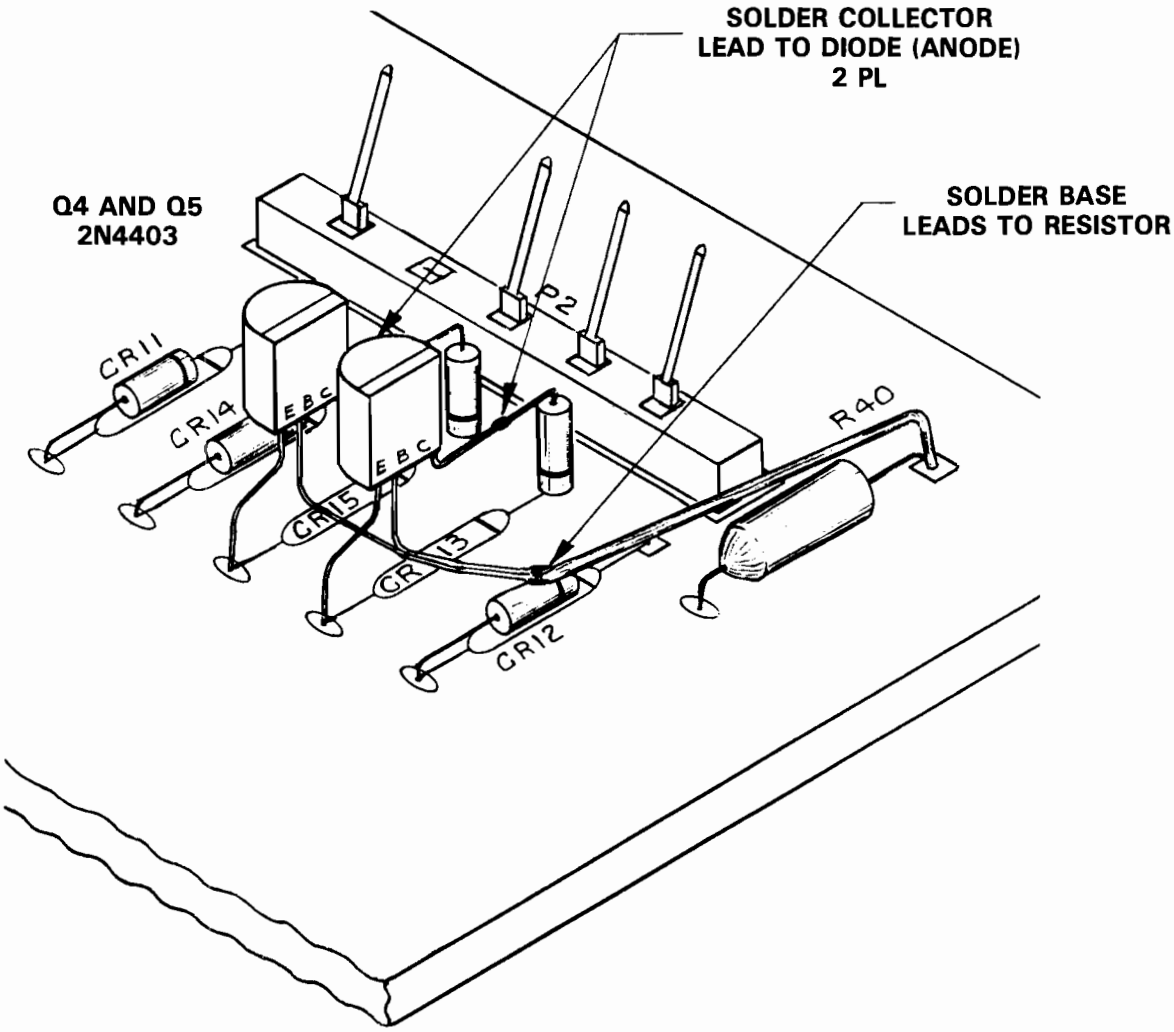

Microprocessor/VIA Logic

U3J is a VIA, Versatile Interface Adapter. During a write operation, the microprocessor passes the data to be recorded to Port A of U3J. The data is loaded into the shift register U3L. It is converted from parallel to serial data and output to the write amplifier circuit. During a read operation, serial data is received from the read amplifier circuit.

The stepper motor is controlled by two outputs on port B of U3J, STP0, and STP1. A binary four count is developed from these two lines by U1P, see Sheet 4. The MTR output on pin 12 controls the spindle motor, refer to the motor control schematic on page 18. The write protect switch, WPS, is monitored at pin 14 of U3J and the red activity LED is controlled at pin 13.

Varying Frequency Clock

The DS0 and DS1 outputs of U3J, pins 15 and 16, are input at pins 1 and 15 of U5M. U5M is a programmable counter (÷16, ÷15, ÷14, ÷13) that outputs a varying frequency clock used to compensate for the difference in recording area/sector for sectors on inner tracks (Trks 1,2,3) as compared to sectors on out most tracks (Trks 33,34,35). The area/sector for inner tracks is less than the area/sector for outer tracks, so the recording clock frequency is increased when writing on inner tracks to keep the flux density constant. This clock output is on pin 12 of U5M and is used to clock the data from the read amplifier circuits.

Tracks	Clock Frequency	Divide By
1-17	1.2307 MHz	13
18-24	1.1428 MHz	14
25-30	1.0666 MHz	15
31-35	1 MHz	16

Read/Write Control Logic

During a write operation, U3L converts parallel data into serial data. The output on pin 9 is input to 'NAND' gate U6M pin 5. U6M outputs the serial data on pin 6 at the clock rate determined by the input signal on pin 4. The output clocks the D flip flop U5N (see Sheet 4). The outputs of U5N, Q and $\overline{Q}$, drive the write amplifiers.

During a read operation, data from the read amplifiers is applied to the CLR input of counter U2N. The outputs, C and D, are shaped by the 'NOR' gate U2M. U2M outputs the serial data on pin 1, then it is converted to parallel data by U2K. The output of U2K is latched by U3K. The serial bits are counted by U5L. When 8 bits have been counted, U6K pin 6 goes "low", U5J pin 6 goes "high", and U6K pin 8 goes "low" indicating byte is ready to be read by the processor. U2L monitors the parallel output of U2K. When all 8 bits are "1", the output pin 9 goes "low" indicating a sync bit has been read.

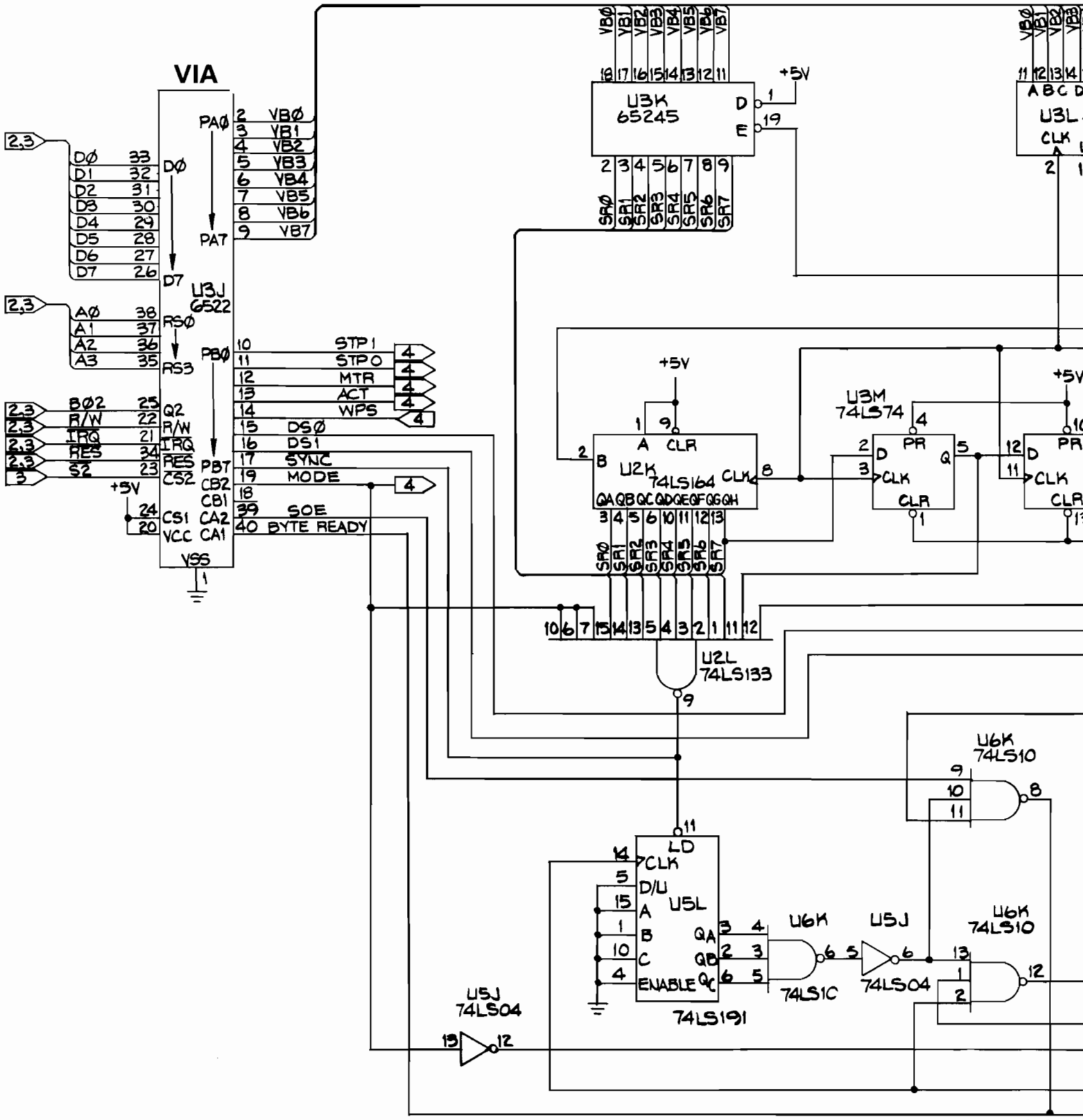

READ/WRITE LOGIC

SCHEMATIC 2031038

SHEET 1 of 4

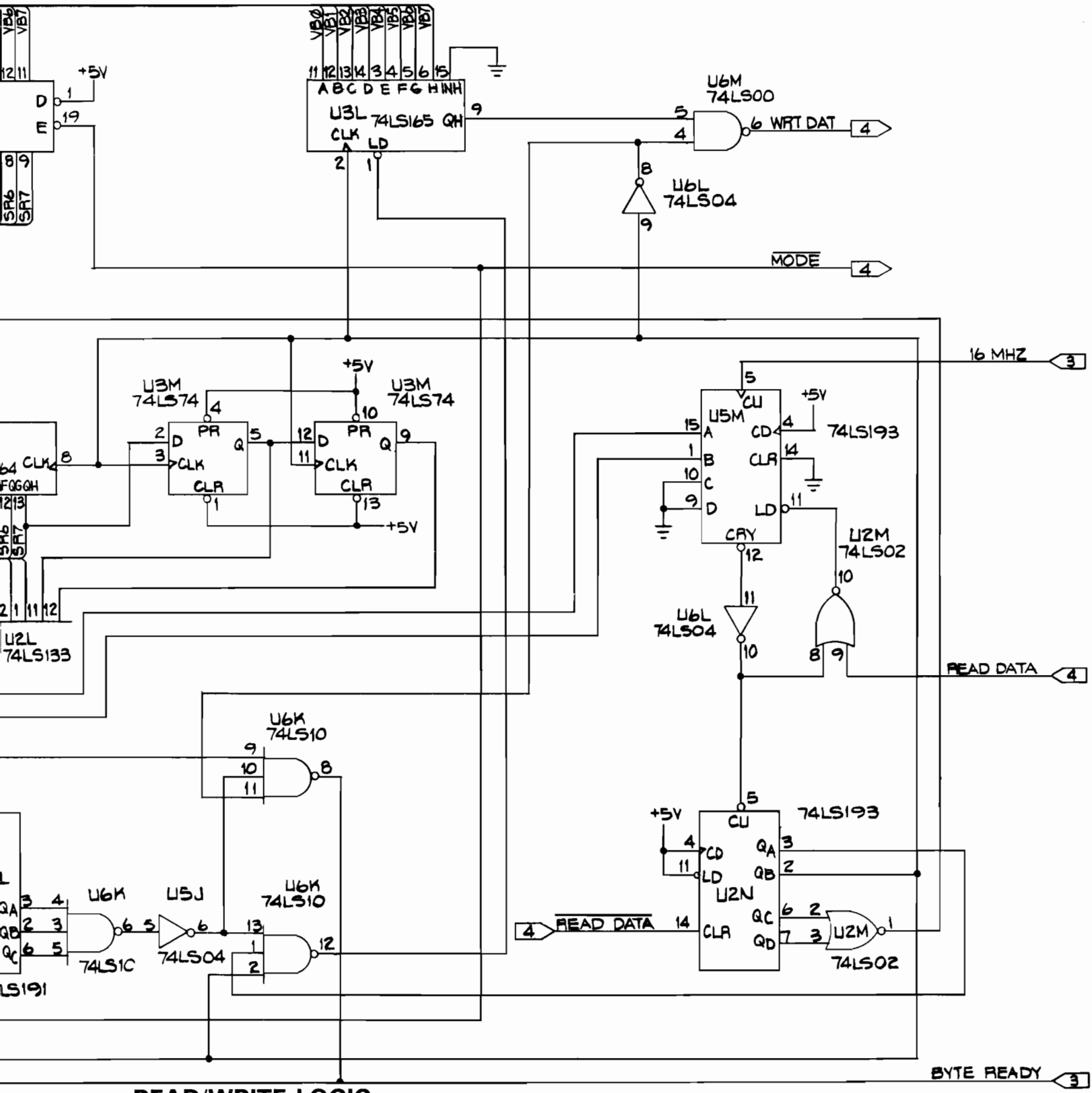

READ/WRITE LOGIC

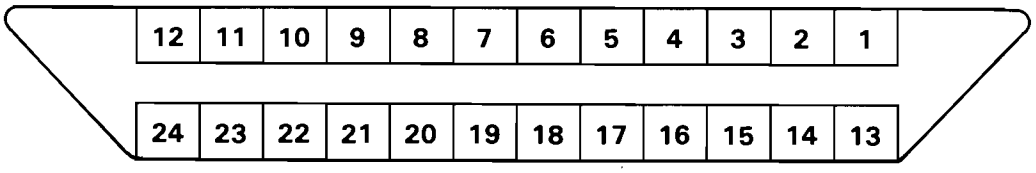

IEEE Interface

All of the signals on the interface are controlled by the I/O device U3H. Eight parallel bi-directional data lines, PA0-PA7, are used as the parallel data bus for the interface. U1S is an octal bus transceiver used to provide communication on the general purpose interface bus, GPIB, between operating units of the system. The data transfer and bus-management signals are communicated by U1A, thus completing the 16-line interface of the IEEE-488 bus.

DAV	Data Valid	DAV low signifies data is valid on the data bus.
EOI	End or Identify	CBM always sets EOI low while the last data byte is being transferred.
DAC	Data Not Accepted	DAC is low when data is being read and returned high after the last data byte is read.
RFD	Not Ready For Data	RFD is low until all receivers are ready to accept data, then the line will go high.
SRQ	Service Request	Not implemented in BASIC but available to the CBM user.
ATN	Attention	The host sets the signal low while sending commands on the data bus.
REN	Remote Enable	REN is held low by the bus controller and the host has this pin permanently grounded.
IFC	Interface Clear	The host sends its internal reset signal as IFC low to initialize all devices.

Reset Logic

The 2031 disk drive is automatically reset on power up by U3S, a 555 timer, when triggered by the 5V applied at pin 8. A reset can also be set by the IFC line on the IEEE interface. The output pulse width is determined by the values of R43 and C36. The pulse width = 1.1 x R43 x C36 ≈ 1 second. The output on pin 3 of U3S is an active "high". It is inverted by U3A to active "low". A low output at U3A pin 2, resets the unit and initializes all of the microprocessor logic.

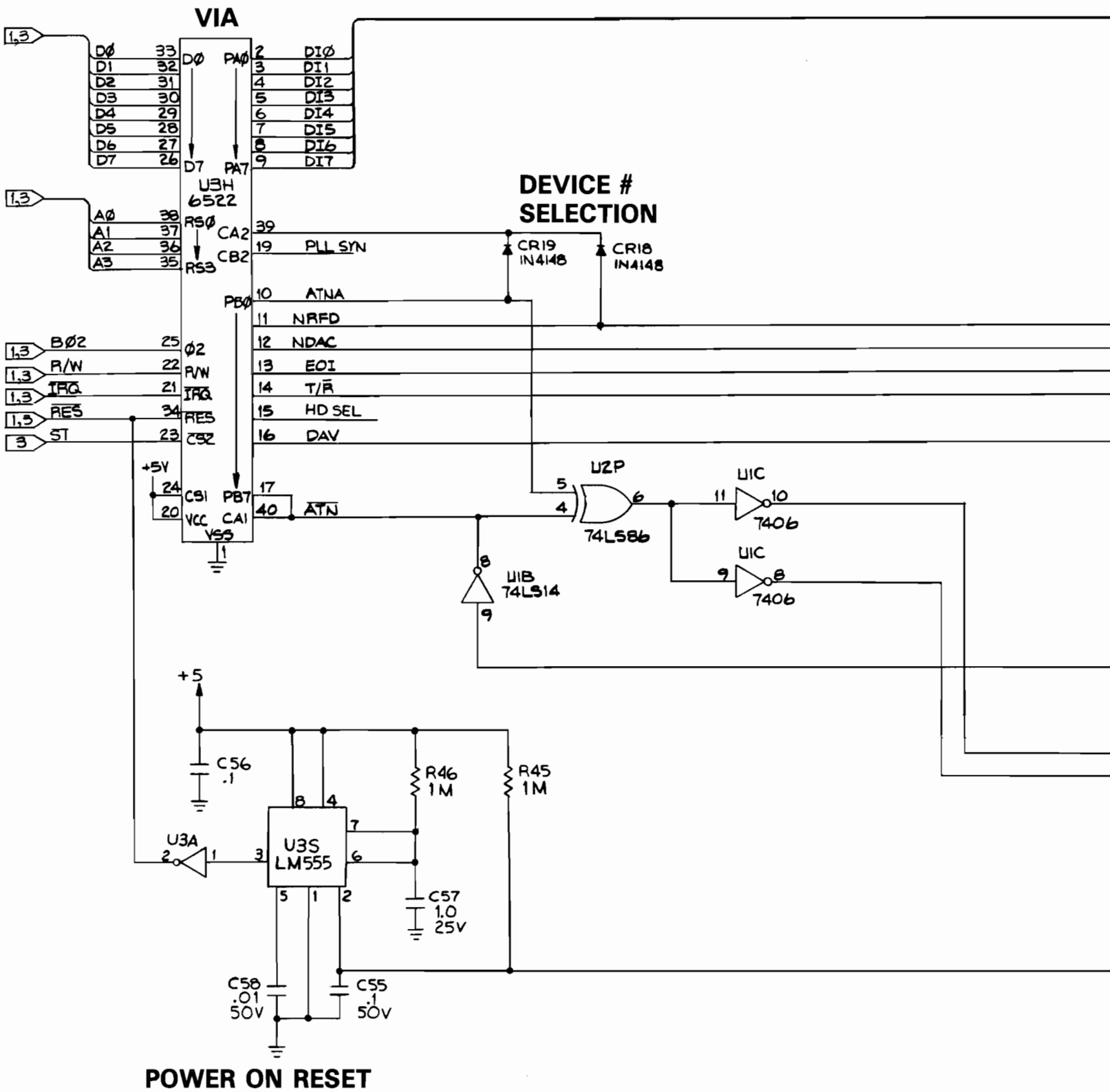
VIA
U3H
6522
DEVICE #
SELECTION
CR19
IN4148
CR18
IN4148
U2P
74LS86
U1C
7406
U1B
74LS14
+5
C56
.1
R46
1M
R45
1M
U3A
U3S
LM555
C57
1.0
25V
C58
.01
50V
C55
.1
50V
POWER ON RESET

SCHEMATIC 2031038

SHEET 2 of 4

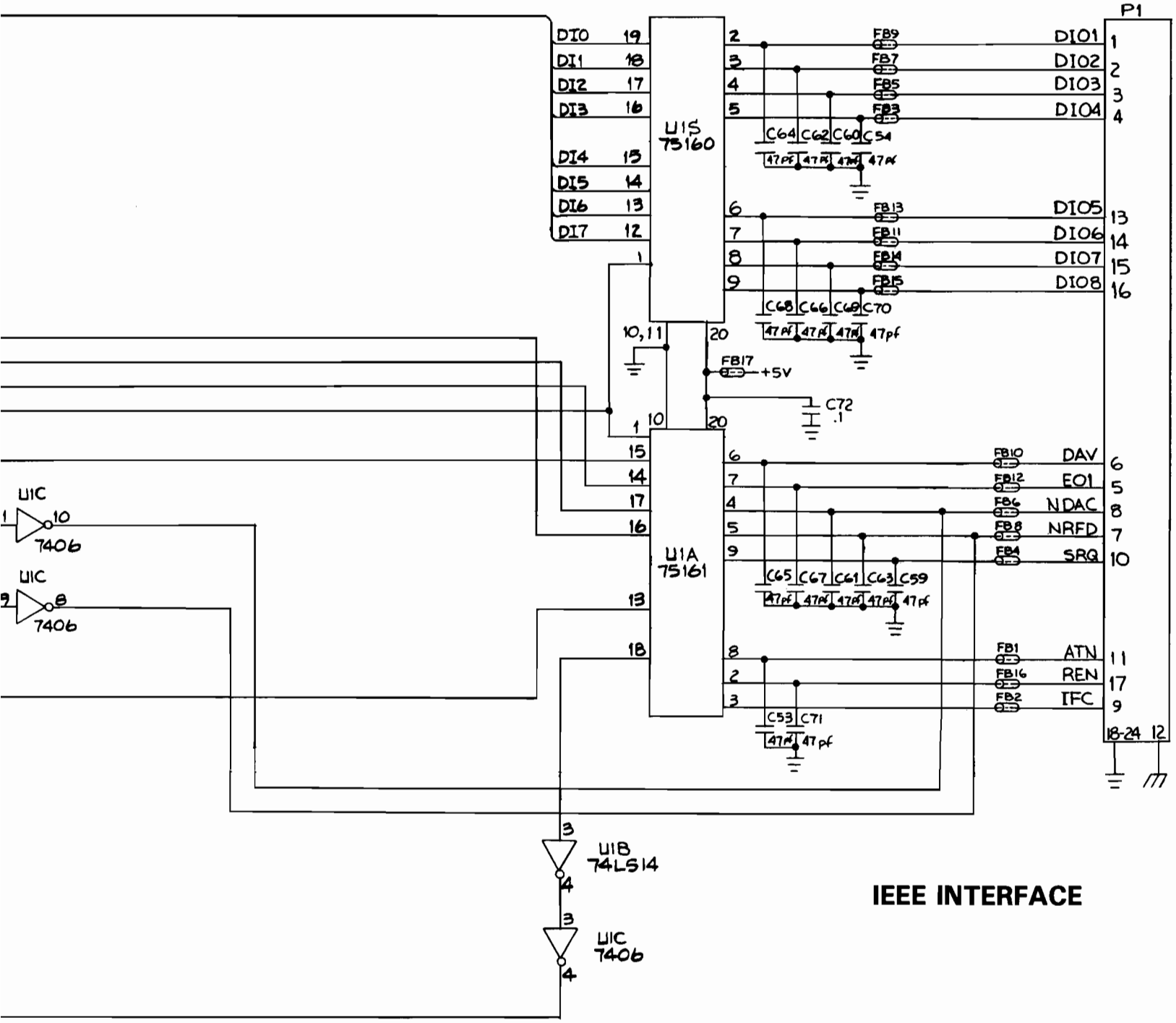

IEEE INTERFACE

Microprocessor Control of RAM and ROM

U5F and U5H are 8192 x 8 bit ROMS that store the Disk Operating System (DOS). U5F resides at memory locations $C000-$DFFF. U5H resides at memory locations $E000-$FFFF. U5J and U5K decode the addresses output from the microprocessor when selecting these ROMS.

U3B, C, D and E are 2114 Static RAMS (24 x 4). They reside at memory locations $0000-$07FF. This memory is used for processor stack operations, general processor housekeeping, user program storage, and 4 temporary buffer areas. U5J, U5K, and U6J decode the addresses output from the processor when selecting RAM. U6J also decodes the address selection of the VIAs, U3J and U3H.

The Clock Circuit

The clock circuit outputs a 16 MHz clock signal at U4C pin 11. This is input to U4D on pin 5. U4D is configured as a ÷16 frequency divider. The output of U4D pin 7 is a 1 MHz clock signal used as the system clock (Phase 0) for the microprocessor. The 16 MHz clock signal is also used for the varying frequency clock circuit, see Sheet 1.

The Power Supply

THE CHASSIS: When the switch is closed, the AC voltage input is applied to the primary winding of the transformer. Circuit protection is provided by a .5 amp fuse. The transformer steps down the AC input voltage into two smaller AC voltages: One secondary output (approx. 16VRMS) is applied at connector P3 pins 1 and 4, the other secondary output (approx. 9VRMS) is applied at P3 pins 2 and 3.

THE PCB: The 16VRMS AC applied between pins 1 and 4 is converted to DC by the full wave bridge rectifier CR1. The DC output of CR1 is regulated at +12VDC by VR2. High frequency filtering is provided by C6, low frequency filtering by C2 and C4. The 9VRMS AC applied between pins 2 and 3 is converted to DC by the full wave bridge rectifier CR2. The DC output is regulated at +5VDC by VR1. High frequency filtering is provided by C5, low frequency filtering by C1 and C3.

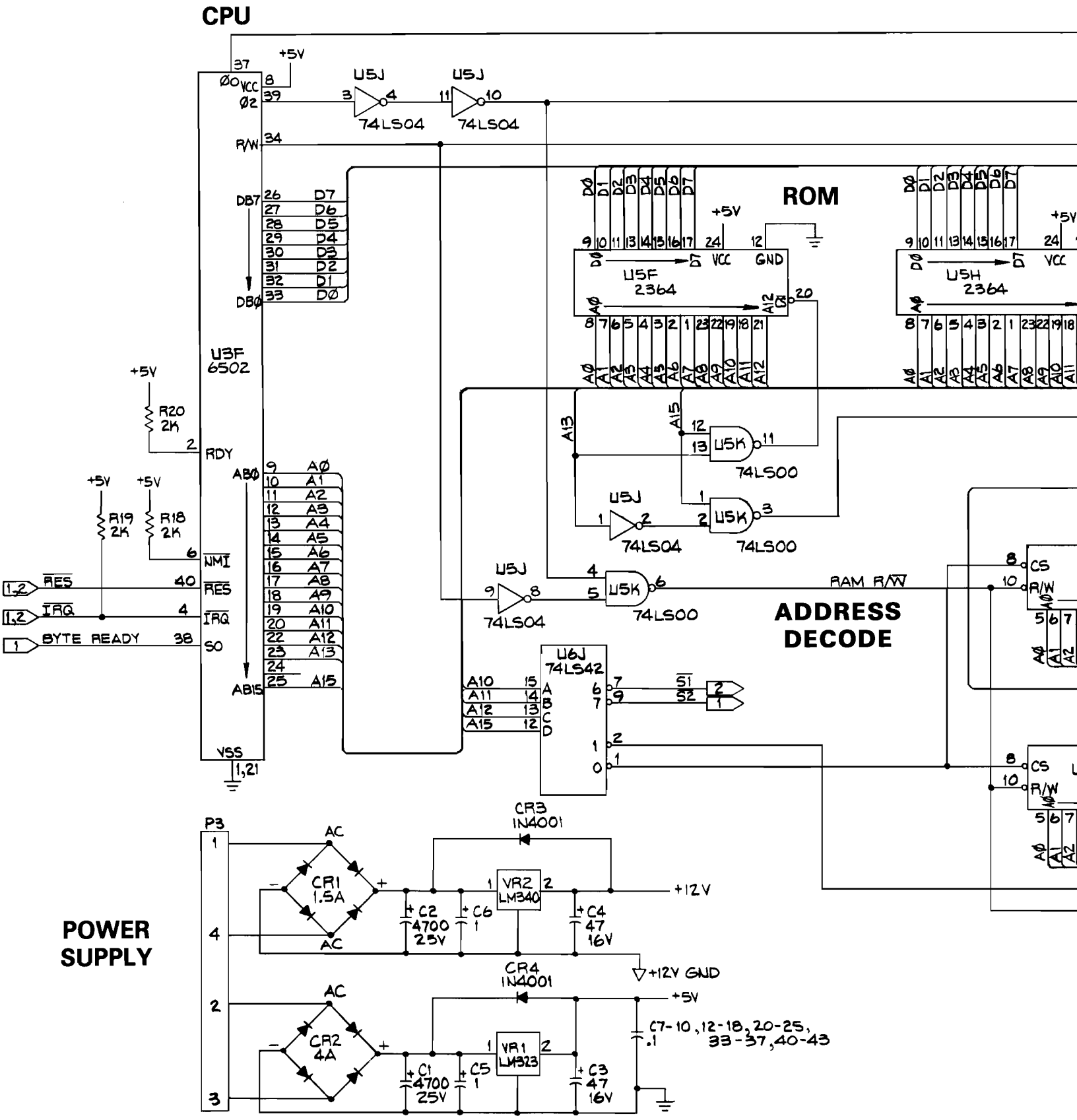
CPU
U3F
6502
+5V
VCC
Ø2
R/W
DB7
DBØ
D7
D6
D5
D4
D3
D2
D1
DØ
R20
2K
RDY
ABØ
AB15
R19
2K
R18
2K
NMI
RES
IRQ
SO
VSS
BYTE READY
U5J
74LS04
ROM
U5F
2364
U5H
2364
GND
U5K
74LS00
A13
A15
RAM R/W
ADDRESS
DECODE
U6J
74LS42
A10
A11
A12
A15
S1
S2
CS
R/W
POWER
SUPPLY
P3
AC
CR1
1.5A
CR2
4A
CR3
1N4001
CR4
1N4001
C2
4700
25V
C6
1
C4
47
16V
C1
4700
25V
C5
1
C3
47
16V
VR2
LM340
VR1
LM323
+12V
+12V GND
+5V
C7-10, 12-18, 20-25,
33-37, 40-43
.1

SCHEMATIC 2031038

SHEET 3 of 4

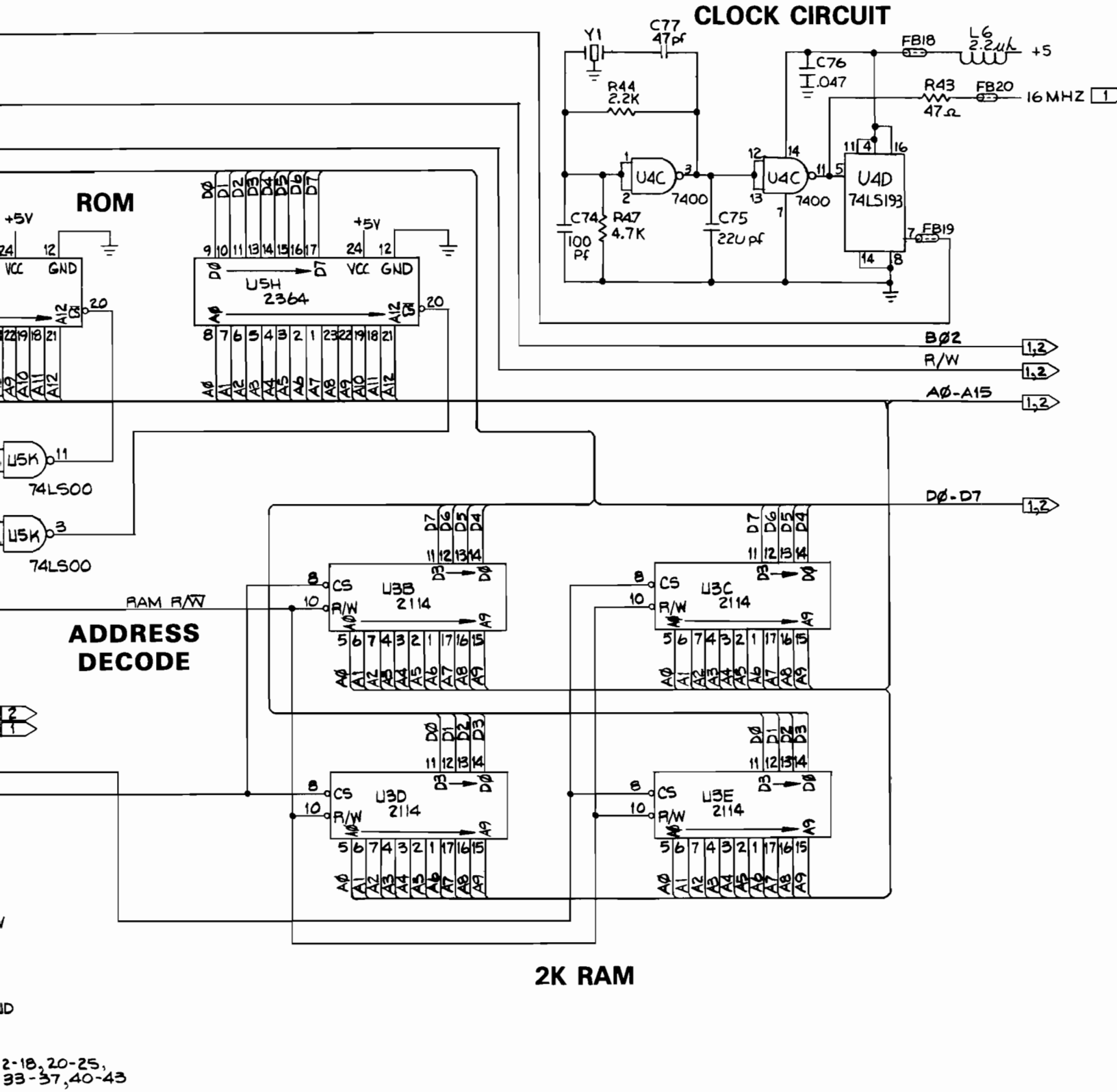

2-18, 20-25,
33-37, 40-43

Stepper Motor Control Circuits

U1P converts STP0 and STP1 into outputs that create a binary four count. The outputs Y0, Y1, Y2, and Y3 from U1P are inverted by U1N. The outputs of the inverters drive the transistors of U1L. The current output from these transistors drive the individual phase coils in the stepper motor and return to the 12VDC supply. CR6-CR9 suppress the CEMF developed by the motor coils.

Read Amplifier Circuits

When data is recorded on the disk, a "1" bit is represented on the disk by a change in direction of magnetic flux, caused by a change in direction of current passed through the R/W coil in the R/W head. When a "0" bit is to be recorded, no change in current flow direction occurs, causing the direction of the magnetic flux to remain the same on the disk.

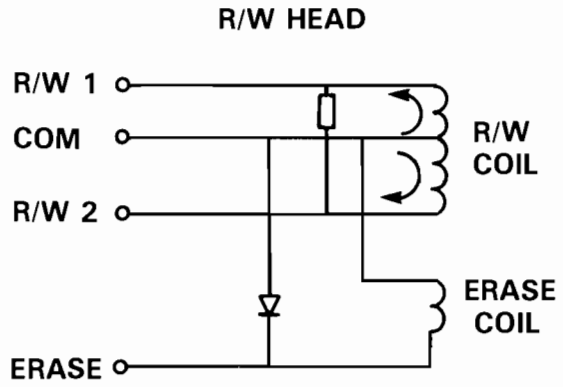

When data is being read from the disk, CEMF is induced into the R/W coil by the magnetic fields on the disk, causing current flow which is detected by the read amplifiers. Current flow through the R/W coil will forward bias either CR12 or CR14, depending on the direction. Q1 and CR16 must be forward biased. The first amplifier, U5R, senses this current flow from the R/W coil on one of the inputs and amplifies it. L2, L3, L4, L5 and C39 act as a low pass filter, suppressing noise on the amplified output. U3R is a differential amplifier which amplifies the difference of the two input signals from the filter section. U2R is a peak detector. The output of U2R will pulse "high" when a "1" is read. This signal is the reconstruction of data recorded. The time domain filter, U3N, times out when a "1" bit has been read, so unwanted "1" bits are not added to the actual data. The one shot, U3N, generates the correct data pulse width.

Write Amplifier Circuits

During a write operation, pin 4 of U6N must be "high". This forward biases Q1 and CR16. If pin 5 of U5N, Q, goes "low", Q4 and CR15 become forward biased, passing current flow through R/W 1. If $\overline{Q}$ goes "low", Q5 and CR13 become forward biased, passing current flow through R/W 2.

When a write operation occurs, the ERASE coil is energized by forward biasing CR11. This demagnetizes the outer edges of the track, preventing data on one track from bleeding into the next track.

Power Up/Down Write Protection

This circuit prevents erroneous data from being written on the disk during power up/down sequences. During a power up, the 12VDC supply is not applied to the R/W coils and amplifier circuits before the processor has control of the logic. During a power down, the 12VDC supply is removed from the R/W coils and amplifier circuits before the processor loses control of the logic.

Q3 acts as a series pass transistor biased to regulate the 12VF output to the R/W coils and amplifier circuits. Q2 is a feedback amplifier monitoring the 5VDC supply. CR17 develops a precise reference voltage for Q2. L1 and C45 delay the 12VDC supply.

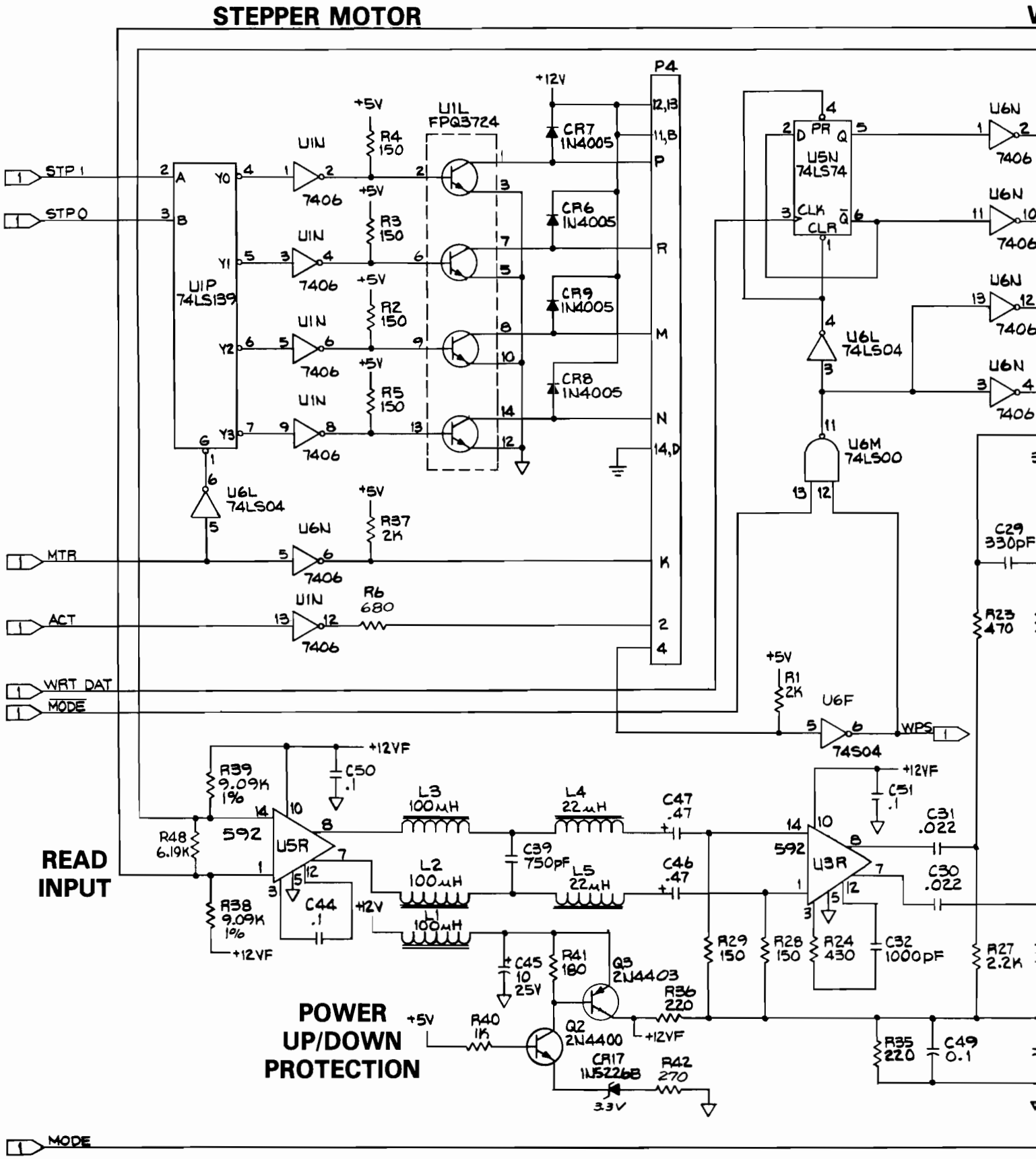
STEPPER MOTOR
STP 1
STPO
MTR
ACT
WRT DAT
MODE
U1P 74LS139
U1N 7406
U1L FPQ3724
R4 150
R3 150
R2 150
R5 150
R37 2K
R6 680
CR7 1N4005
CR6 1N4005
CR9 1N4005
CR8 1N4005
+12V
+5V
P4
U5N 74LS74
U6L 74LS04
U6M 74LS00
U6F 74S04
R1 2K
WPS
C29 330pF
R23 470
READ INPUT
U5R 592
U3R 592
R39 9.09K 1%
R38 9.09K 1%
R48 6.19K
C50 .1
C44 .1
C51 .1
C31 .022
C30 .022
L3 100µH
L2 100µH
L1 100µH
L4 22µH
L5 22µH
C39 750pF
C47 .47
C46 .47
+12VF
R29 150
R28 150
R24 430
C32 1000pF
R27 2.2K
R35 220
C49 0.1
POWER UP/DOWN PROTECTION
C45 10 25V
R41 180
Q3 2N4403
R36 220
R40 1K
Q2 2N4400
CR17 1N5226B
3.3V
R42 270

SCHEMATIC 2031038

SHEET 4 of 4

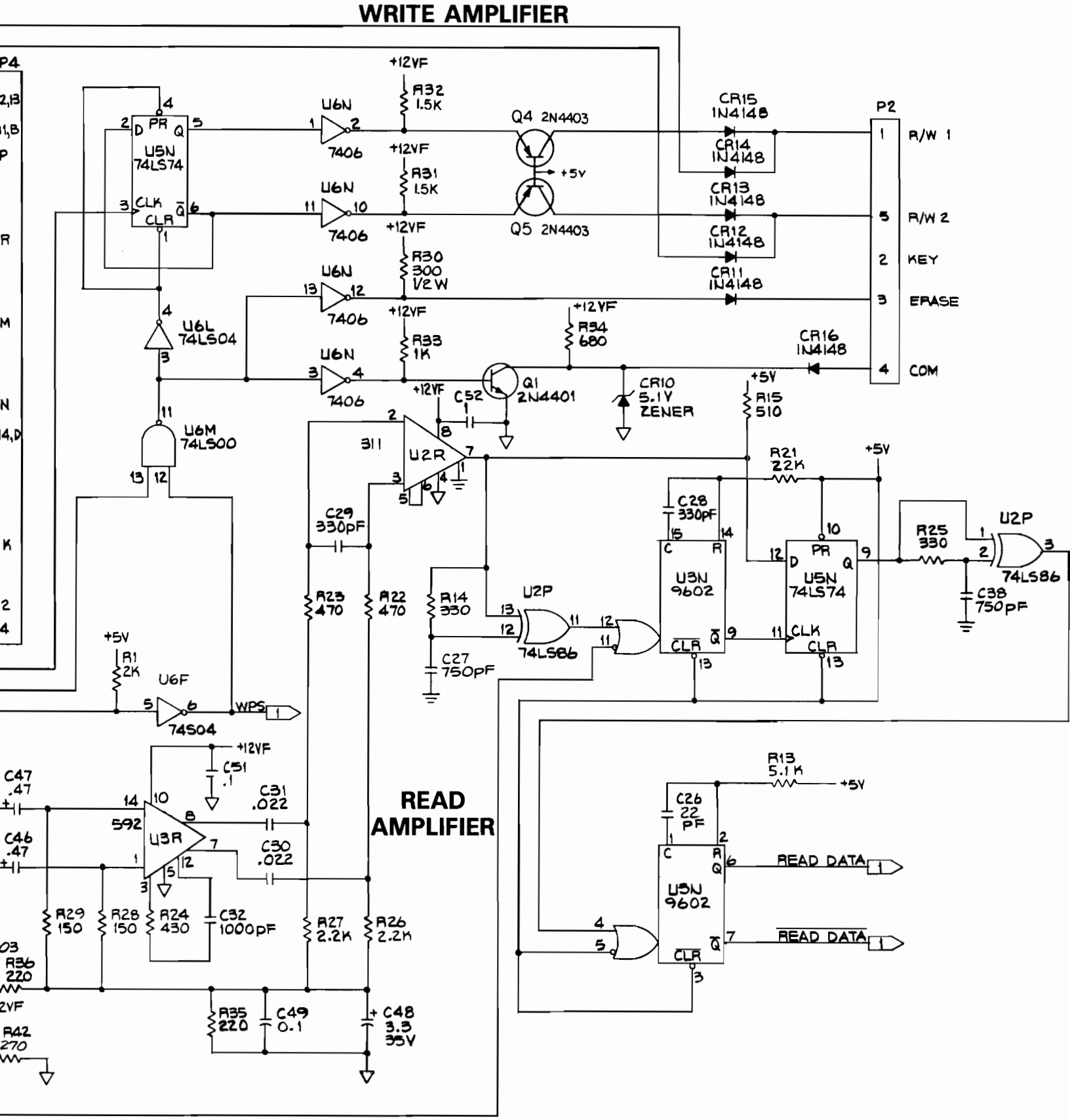

2031 HP POWER SUPPLY ASSEMBLY PARTS LIST

FUSE HOLDER	
ROCKER SWITCH	904507-01
POWER CONNECT FILTER	903467-03
FUSE, SLOW BLO, 250V, .5A	903555-15
POWER TRANSFORMER	320939-01

2031 HIGH PROFILE POWER SUPPLY #2031002-01

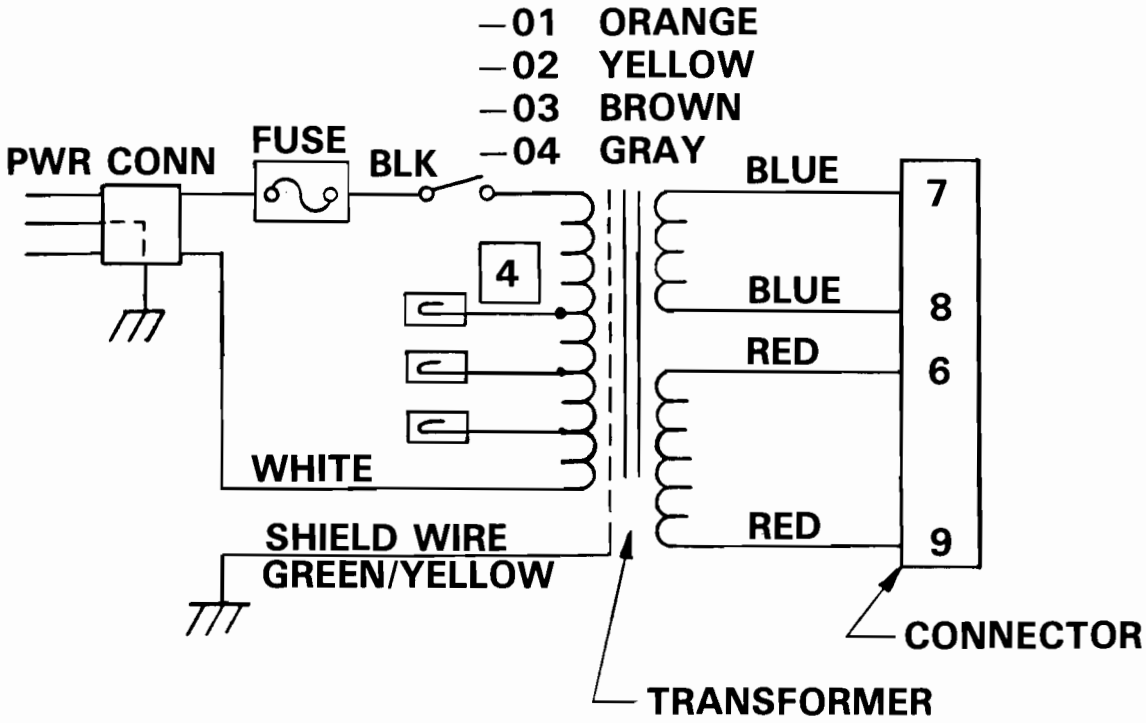

WIRING DIAGRAM

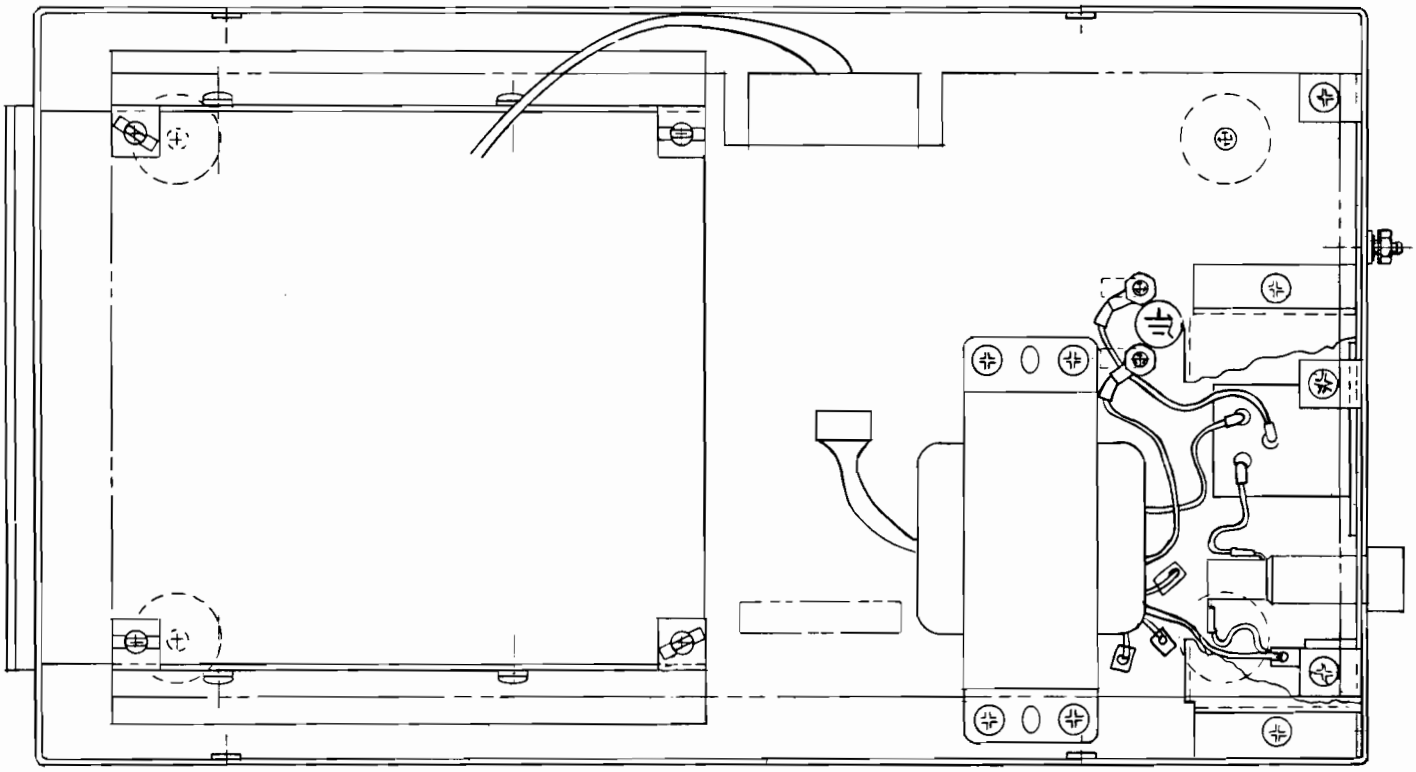

ASSEMBLY DRAWING

PARTS LIST

95055000 Shugart Drive Assembly

(1) 31414001 SHU DOOR/HUB ASSEMBLY
- 1-Door Assy w/Frame
- 2-Hub/Collet Assy

(2) 31414101 SHU LEFT DISK GUIDE

(3) 31414201 SHU RIGHT DISK GUIDE

(4) 31414301 SHU FRONT BEZEL

(5) 31414401 SHU R/W HEAD ASSEMBLY
- 1-R/W Head w/Harness
- 2-Load Arm w/Pad

(6) 31414501 SHU STEPPER MOTOR ASSEMBLY
- 1-Stepper Motor w/Harness

(7) 31414601 SHU D.C. MOTOR

(8) 31414701 SHU MOTOR CONTROL PCB

(9) 31414801 SHU HOUSING/SPINDLE ASSY
- 1-Housing Base
- 2-Spindle Assy
- 3-L/R Guide Shafts

(10) 31414901 SHU DRIVE BELT

(11) 31415001 SHU WRITE PROTECT SWITCH

31415101 SHU HARDWARE
- 1-Assorted Screws

(12) 31415201 SHU CAM ACTIVATOR

(13) 903820-03 UNIV. LAMP HOLDER SET

SHUGART DRIVE ASSEMBLY
2031HP/2040/4040

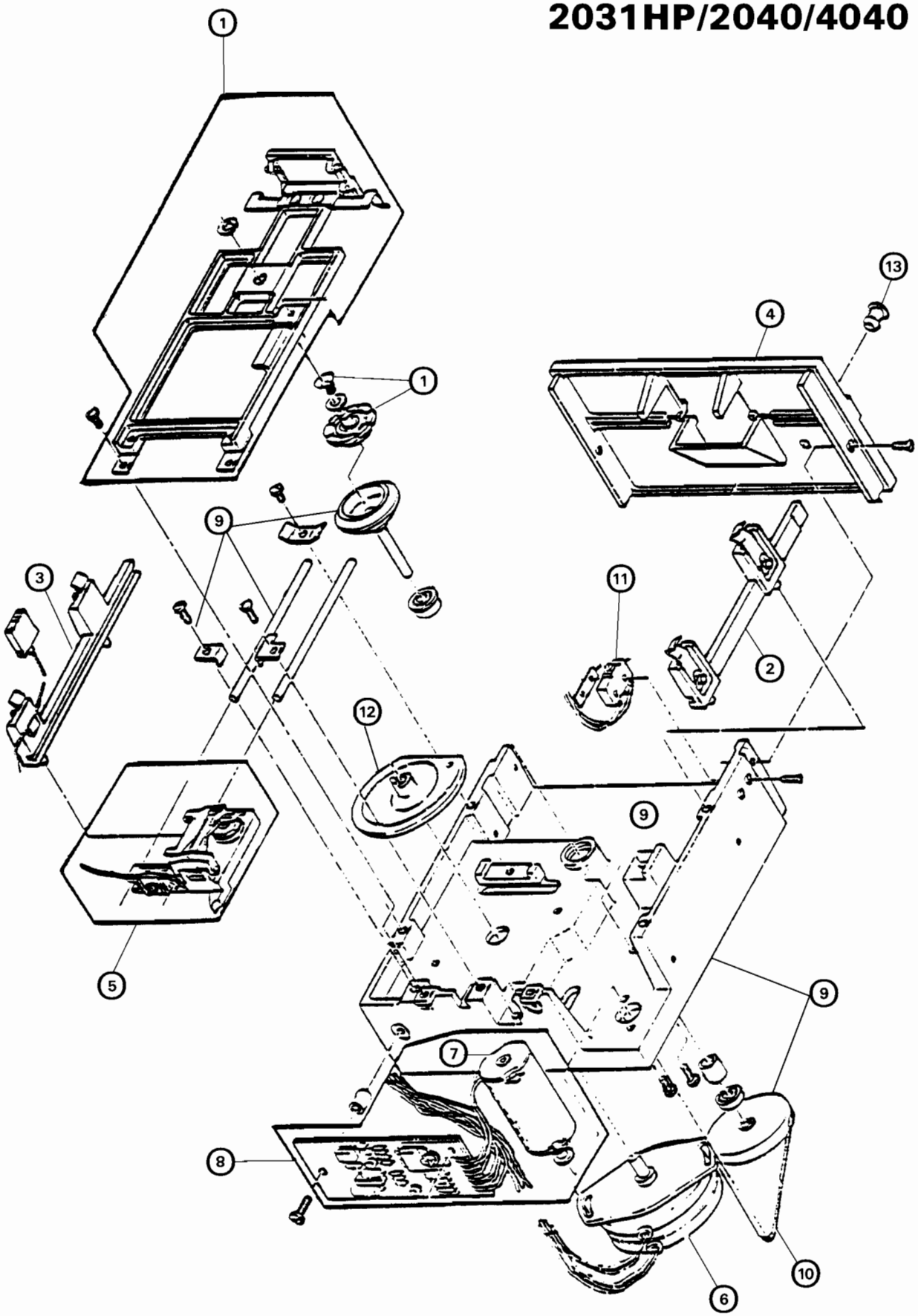

RESISTANCE CHECKS
HIGH PROFILE — SHUGART DRIVE

Stepper Motor

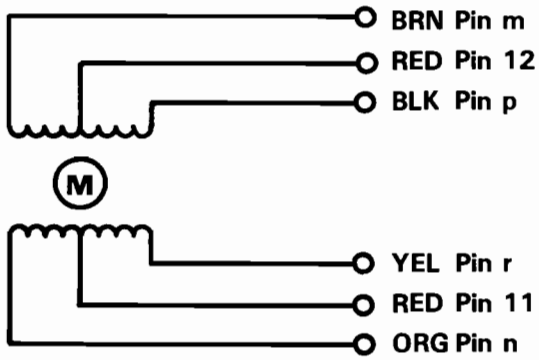

End to end on either coil = 74 ohms
End to centertap = 37 ohms

Spindle Motor

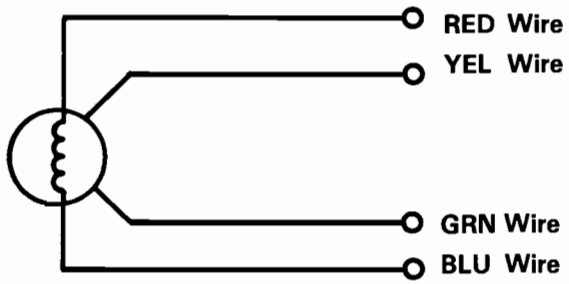

Motor coil (red wire to blue wire) = 71 ohms
Tach coil (green wire to yellow wire) = 175 ohms at rest
Tach coil while rotating spindle = 135 – 195 ohms

Measurements made at connector on motor control pcb.

R/W Head

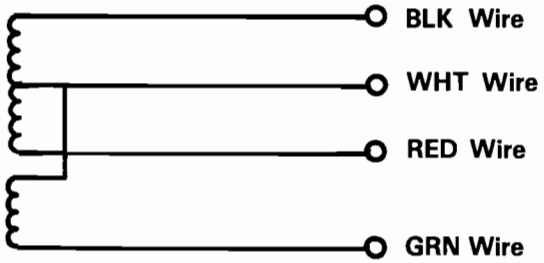

R/W coil (black wire to red wire) = 28.5 ohms
R/W coil (red wire to white wire) = 15 ohms
R/W coil (black wire to white wire) = 15 ohms
Erase coil (green wire to white wire) = 11.9 ohms

Measurements made at the 5 pin plug at the end of the R/W head cable. The plug should be disconnected.

PARTS LIST

INTERGRATED CIRCUITS	
1A	LM 2917N
TRANSISTORS	
Q1 Q2	GE 7941 sub: GE 7947 M10060-0
DIODES	
CR1-7	IN4148
CAPACITORS — All values in microfarads	
C1 C2 C3 C4 C5 C6 C7 C8 C9	4.7 50V Tant .015 35V 5% .047 50V .47 50V Tant .1 50V 1 35V 220 16V Elect .47 50V Tant .015 50V (Assy 25181 ONLY)
RESISTORS — Ceramic 1/8W All values in ohms at 5% unless otherwise noted	
R1 R2 R3 R4 R5 R6 R7 R8 R9 R10 R11 R12 R13 R14 R15 R16 R17 R18	100 1%, 1/8W 909 1%, 1/8W 10K 4.7K 40.2K 1%, 1/8W 160K 12 27K 470 23.2K 1%, 1/8W 7.5K 1%, 1/8W 68 68 2K 150 .68, 5%, 1W 5K Trim Pot Rectangle, 3/4 in. 20K

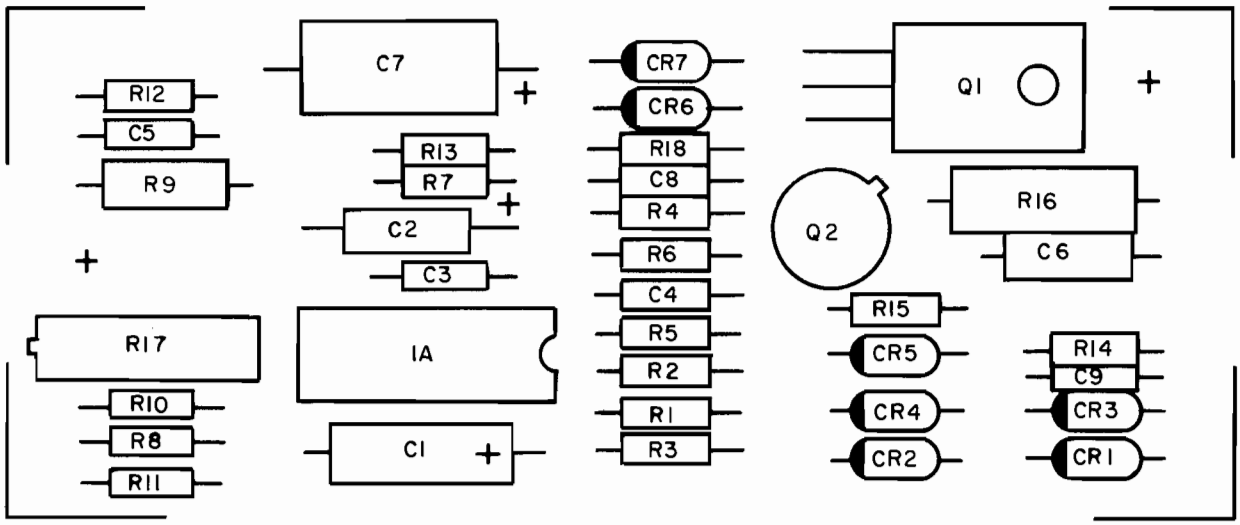

COMPONENT LOCATIONS
MOTOR CONTROL PCB ASSEMBLY P/N 25181

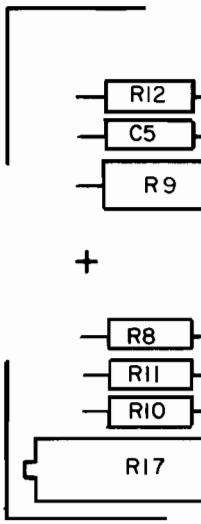

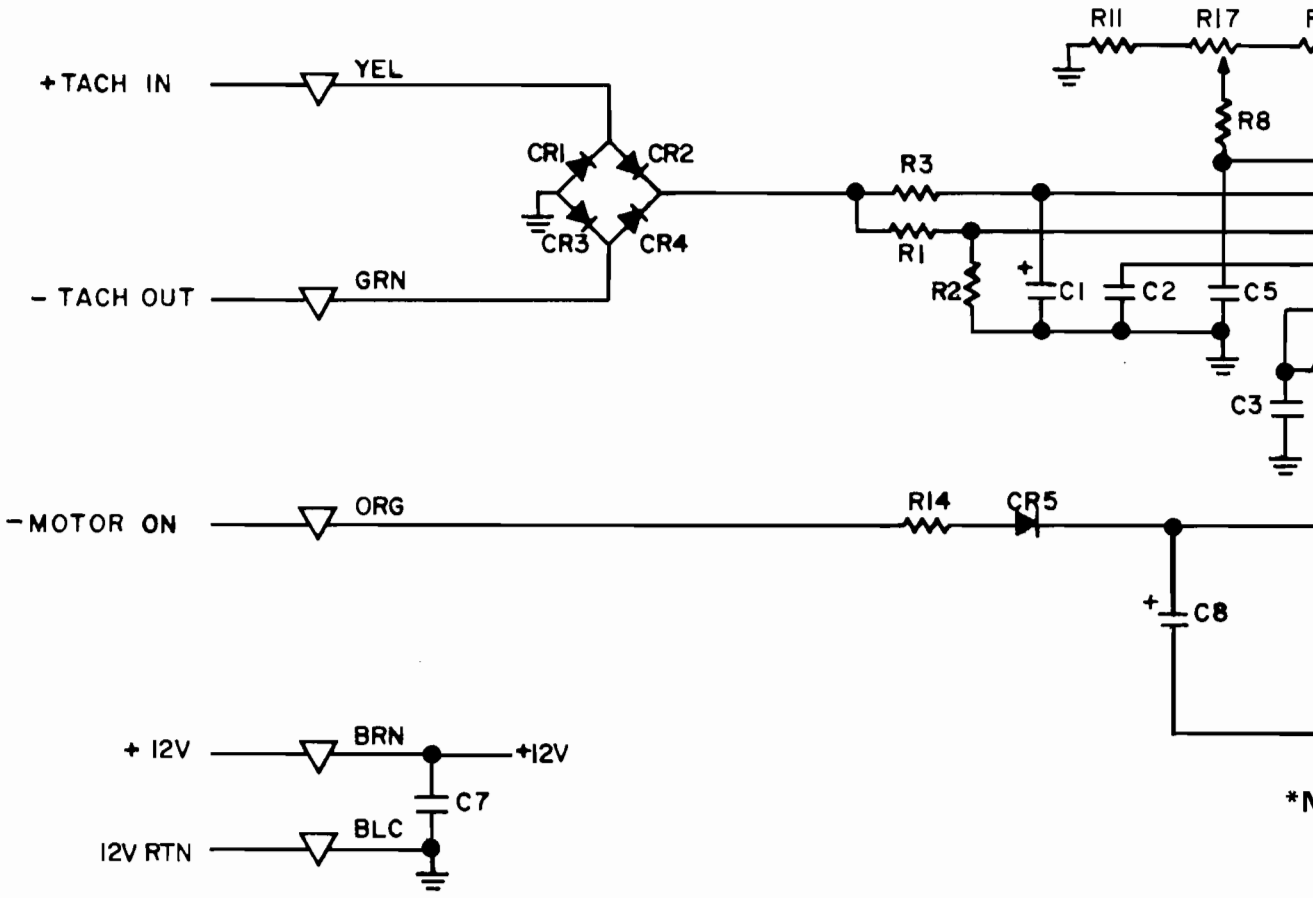

SCHEMATIC

SHUGART SERVO BOARD (COMMODORE PART #31414701)

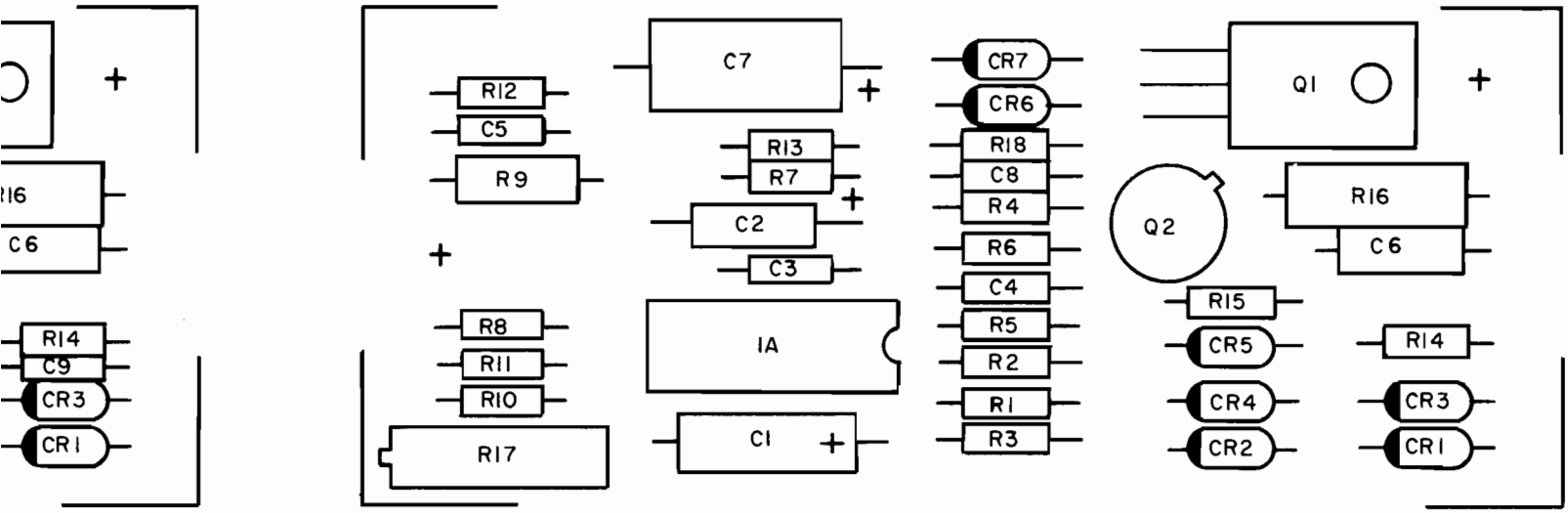

COMPONENT LOCATIONS
MOTOR CONTROL PCB ASSEMBLY P/N 25129

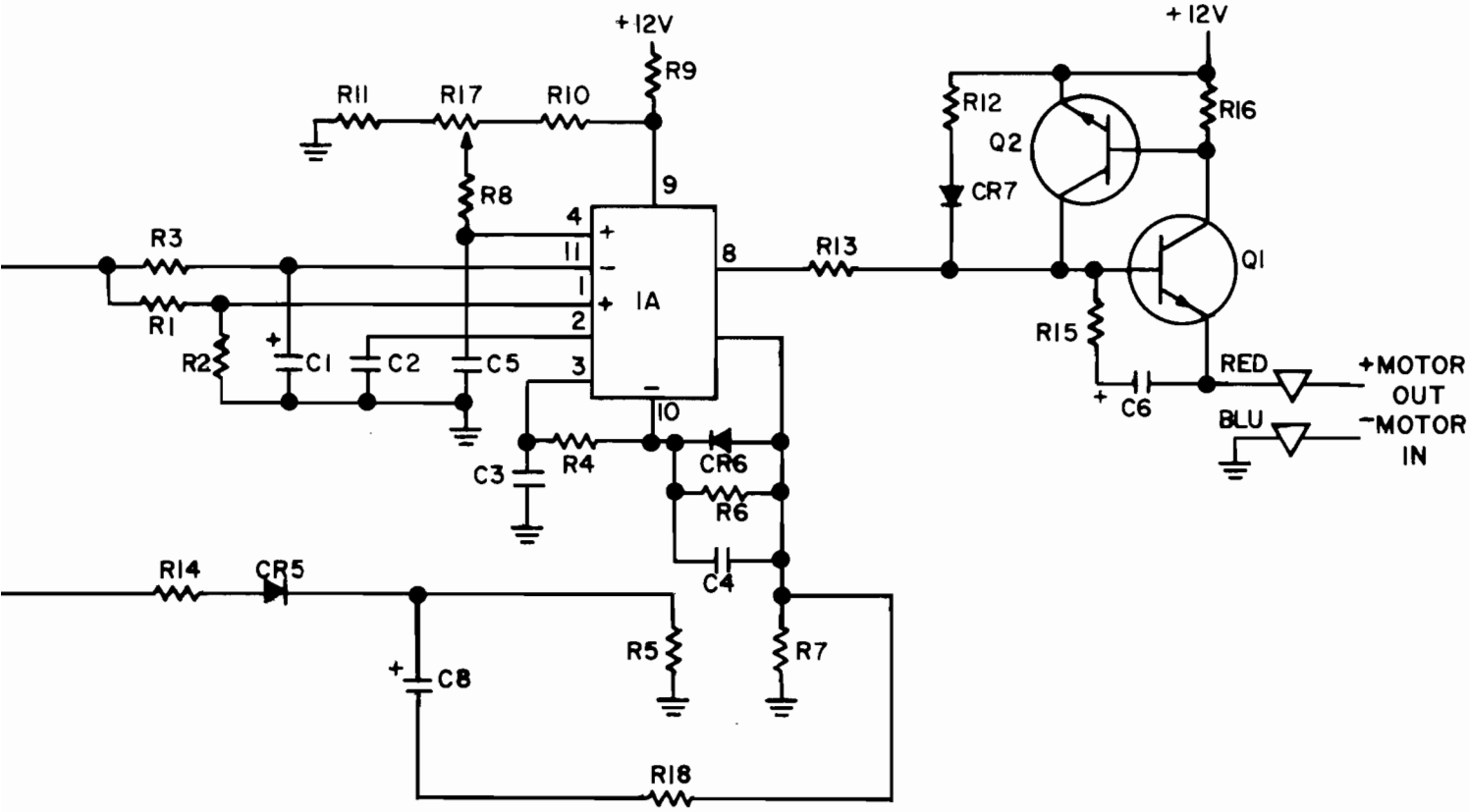

*NOTE: ASSEMBLY P/N 25181
INCLUDES C9 ON
COLLECTOR OF Q1.

SCHEMATIC

LOW PROFILE

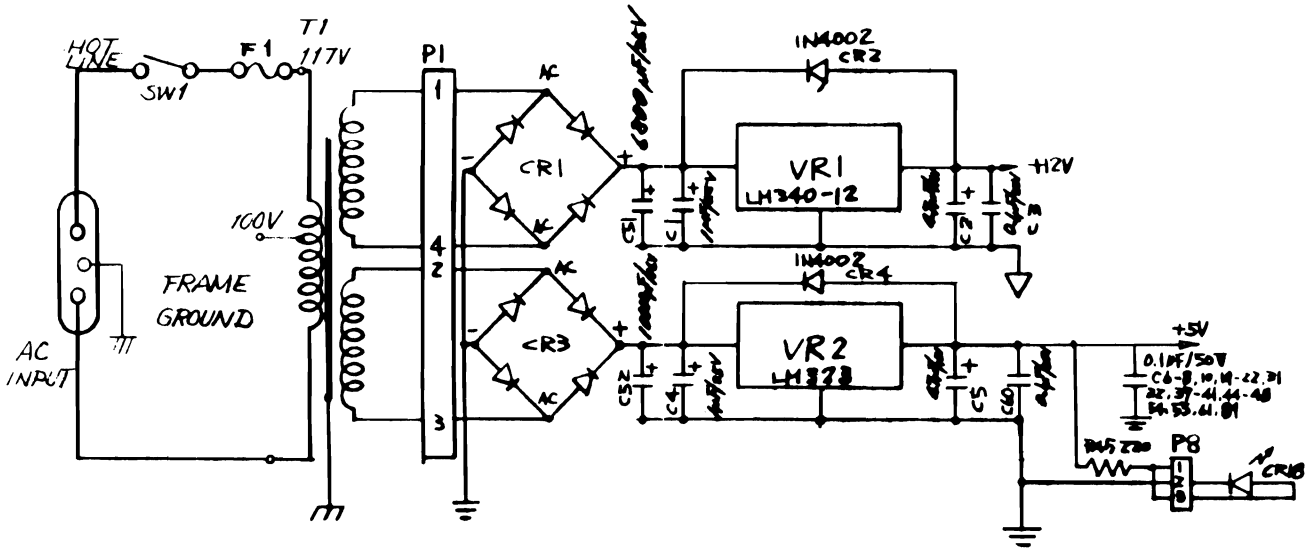

The Power Supply

The input AC voltage is controlled by switch 1 (SW1). Disk circuit protection is provided by fuse 1 (F1). If SW1 is closed, the AC voltage input is applied to the primary winding of transformer one (T1). T1 steps down the AC input voltage into two smaller AC voltages. The top secondary AC output (approx. 16VRMS) is converted to DC by the Full Wave Bridge Rectifier CR1. The DC output of CR1 is regulated at 12VDC by VR1. The bottom secondary AC output of T1 (approx. 9VRMS) is converted to DC by the Full Wave Bridge Rectifier CR3. The DC output of CR3 is regulated at +5VDC by VR2. High frequency filtering is provided by C1 and C3 for the 12VDC supply, and C4, C60, C6-8, 10, 19-22, 31 etc. for the 5VDC supply. Low frequency filtering is provided by C51 and C2 for the 12VDC supply, and C52 and C5 for the 5VDC supply.

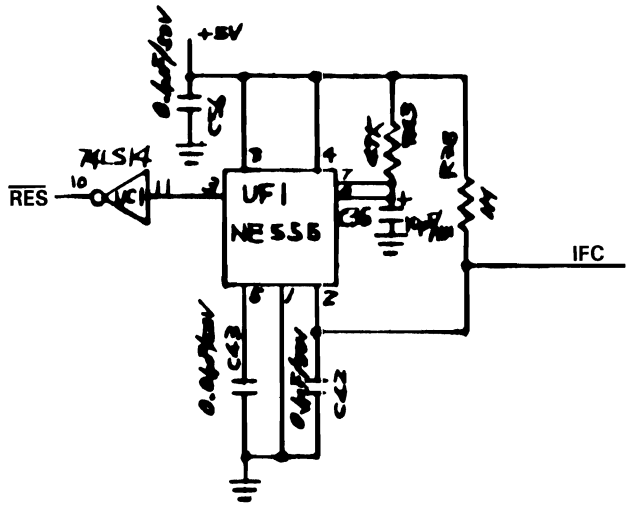

Reset Logic

The 2031 disk drive is automatically reset on power up by UF1, a 555 timer, when triggered by the 5V applied at pin 8. A reset can also be set by the IFC line on the IEEE Interface. The output pulse width is determined by the values of R43 and C36. The pulse width = 1.1 x R43 x C36 ≈ .5 seconds. The output on pin 3 of UF1 is an active "high". It is inverted by UC1 to active "low". A low output at UC1 pin 10 resets the unit and initializes all the microprocessor logic.

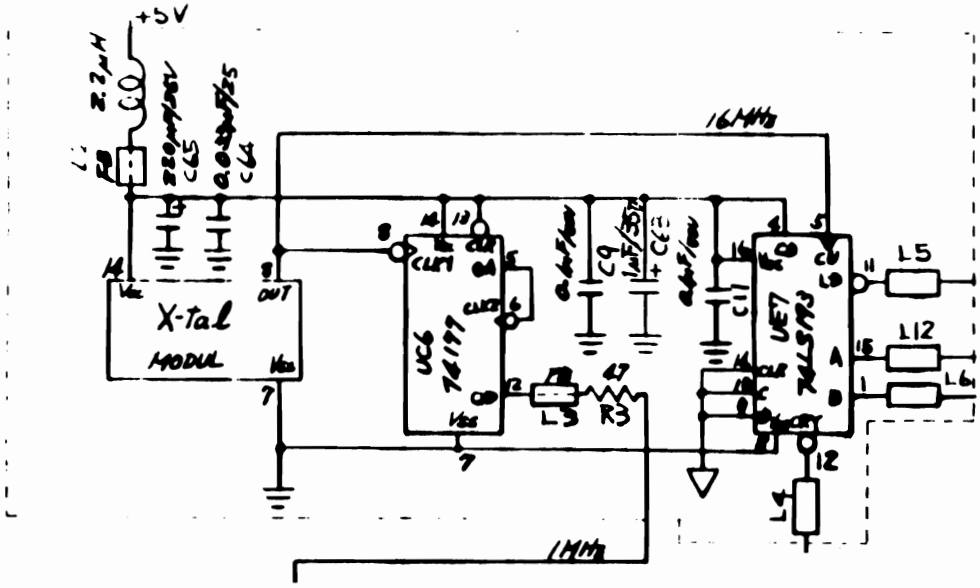

The Clock Circuits

Crystal Y1 outputs a 16 MHz clock signal. This is input to UC6 on pin 8. UC6 is configured as a ÷16 frequency divider. The output of UC6 pin 12 is a 1 MHz clock signal used as the system clock (Phase 0) for the microprocessor. UE7 is a programmable counter (÷16, ÷15, ÷14, ÷13) that outputs a varying frequency clock used to compensate for difference in recording area/sector for sectors on inner tracks (Trks 1,2,3) as compared to sectors on out most tracks (Trks 33,34,35). The area/sector for inner tracks is less than the area/sector for out most tracks, so the recording clock frequency is increased when writing on inner tracks to keep the flux density constant. This clock output is on pin 12 of UE7.

Tracks	Clock Frequency	Divide By
1-17	1.2307 MHz	13
18-24	1.1428 MHz	14
25-30	1.0666 MHz	15
31-35	1 MHz	16

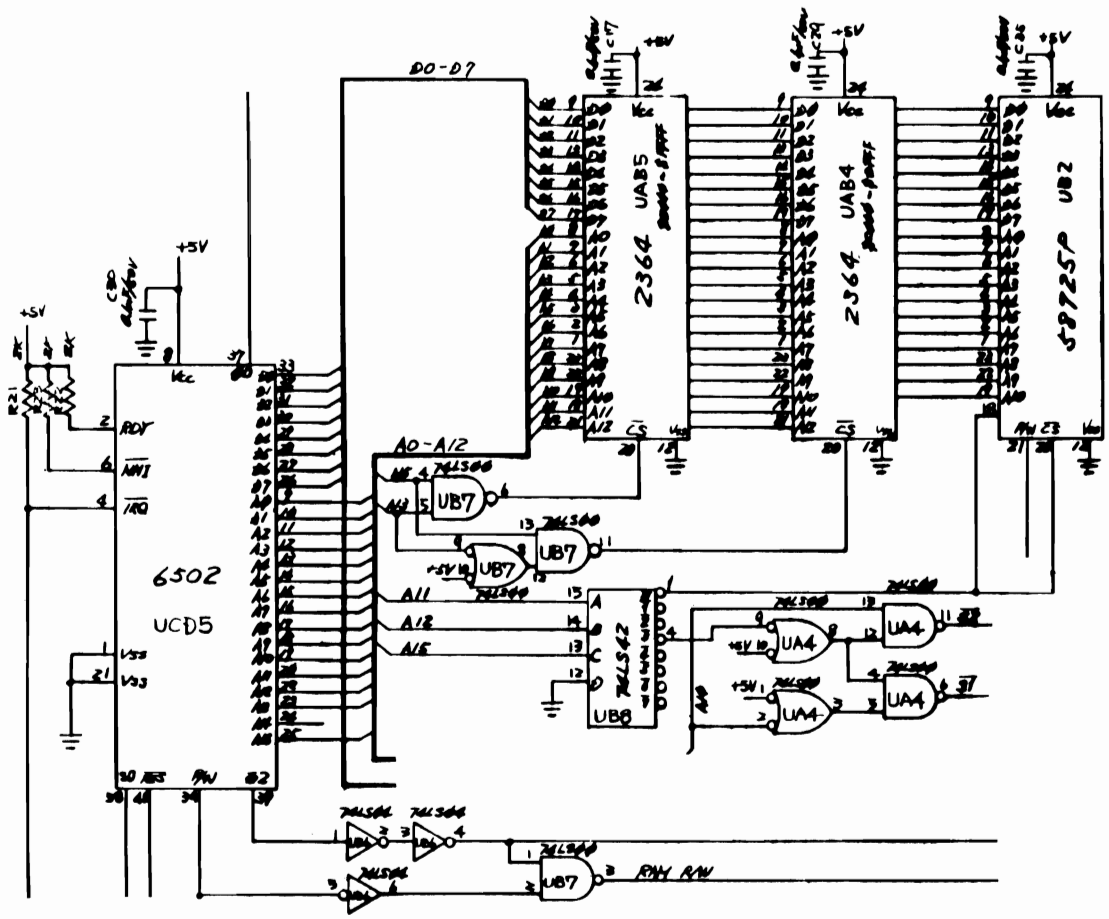

Microprocessor Control of RAM and ROM

UAB4 and UAB5 are 8192 x 8 bit ROMS that store the Disk Operating System (DOS). UAB4 resides at memory locations $C000-$DFFF. UAB5 resides at memory locations $E000-$FFFF. UB7 decodes the addresses output from the microprocessor when selecting these ROMS.

UB2 is a 2048 x 8 bit RAM. UB2 resides at memory locations $0000-$07FF. This memory is used for processor stack operations, general processor housekeeping, user program storage, and 4 temporary buffer areas. UA4, UB6, UB7 and UB8 decode the addresses output from the processor when selecting RAM.

UB8 also controls the chip select line of the VIA, UCD4.

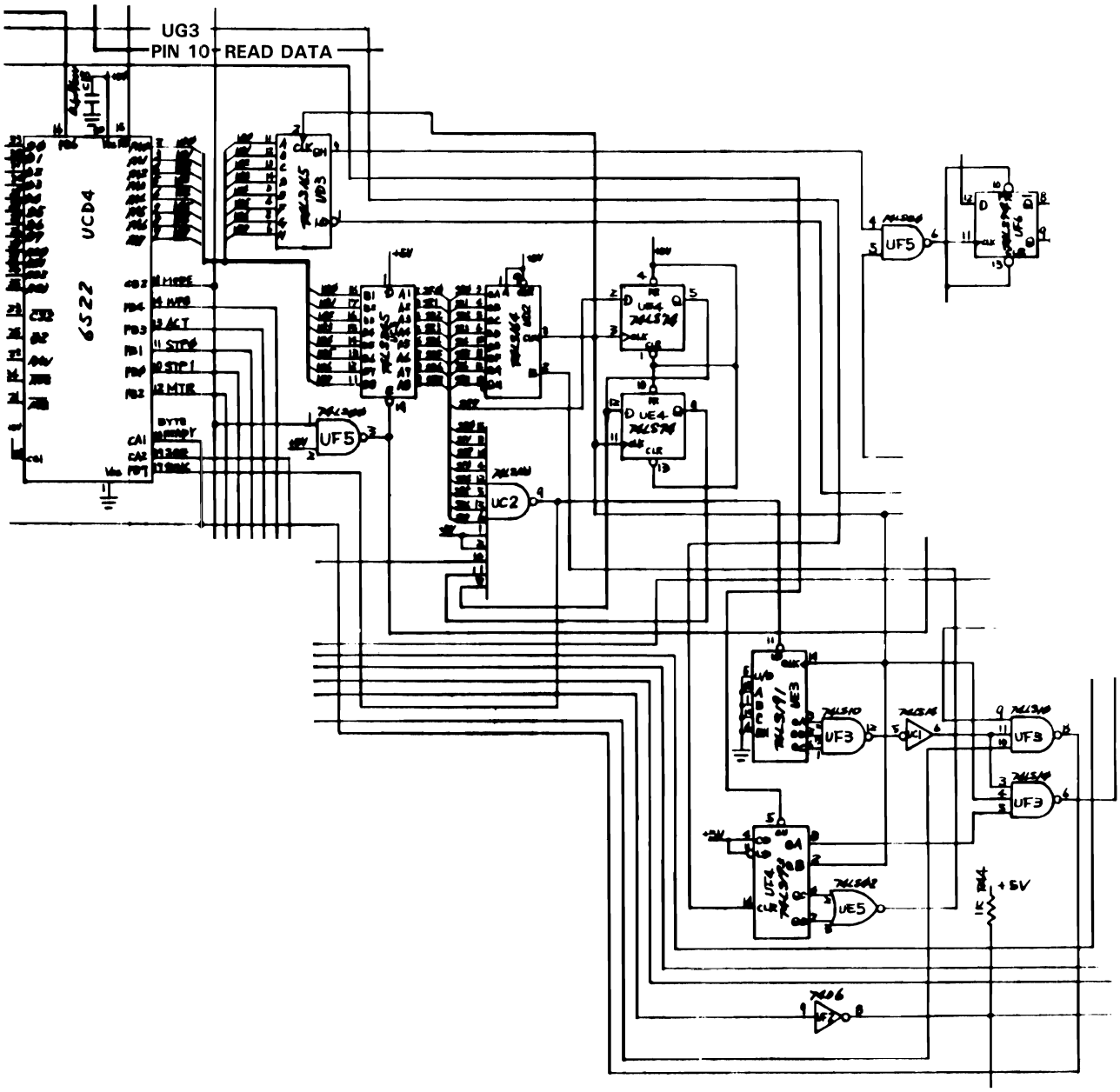

Read/Write Control Logic

UCD4 is a VIA (Versatile Interface Adapter). During a write operation, the microprocessor passes the data to be recorded to Port A of UCD4. The data is then loaded into UD3 which converts the parallel data into serial data. The output on pin 9 is input to 'NAND' gate UF5 pin 4. UF5 outputs the serial data on pin 6 at the clock rate determined by the input signal on pin 5. The output clocks the D flip flop UF6. The outputs of UF6, Q and $\overline{Q}$, drive the write amplifiers.

During a read operation, data from the read amplifiers is applied to the CLR Input of counter UF4. The outputs, C and D, are shaped by the 'NOR' gate UE5. UE5 outputs the serial data on pin 1, then it is converted to parallel data by UD2. The output of UD2 is latched by UC3. The serial bits are counted by UE3, when 8 bits have been counted, UF3 pin 12 goes "low", UC1 pin 6 goes "high", and UF3 pin 8 goes "low" indicating byte is ready to be read by the processor. UC2 monitors the parallel output of UD2, when all 8 bits are "1", the output pin 9 goes "low" indicating a sync bit has been read.

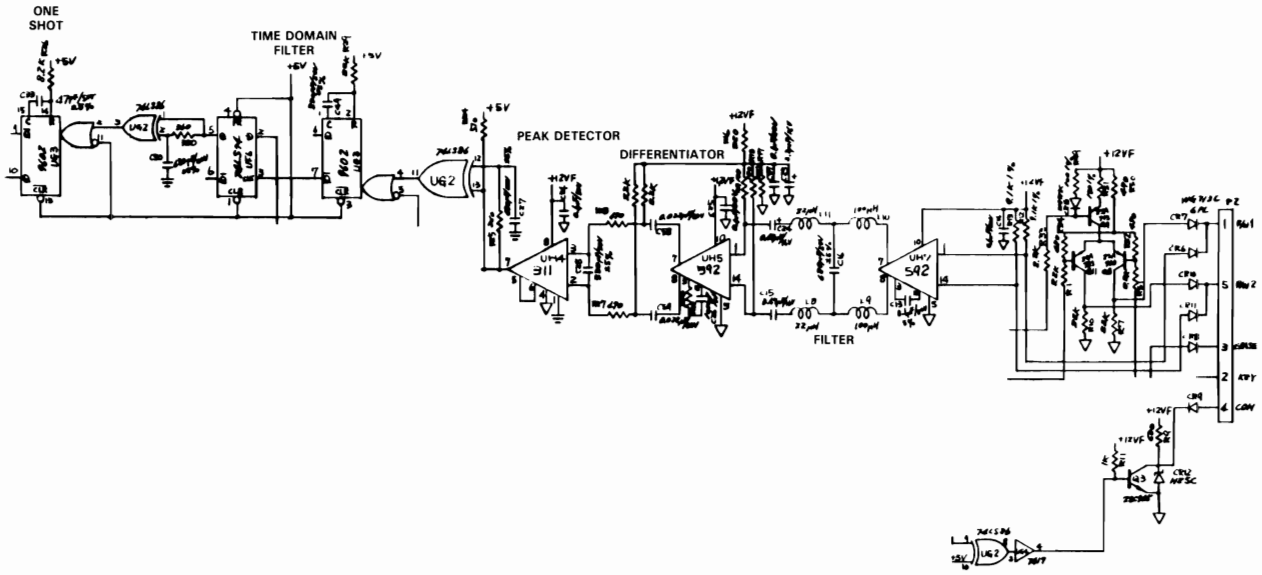

Read Amplifier Circuits

When data is recorded on the disk, a "1" bit is represented on the disk by a change in direction of magnetic flux, caused by a change in direction of current passed through the R/W coil in the R/W head. When a "0" bit is to be recorded, no change in current flow direction occurs, causing the direction of the magnetic flux to remain the same on the disk.

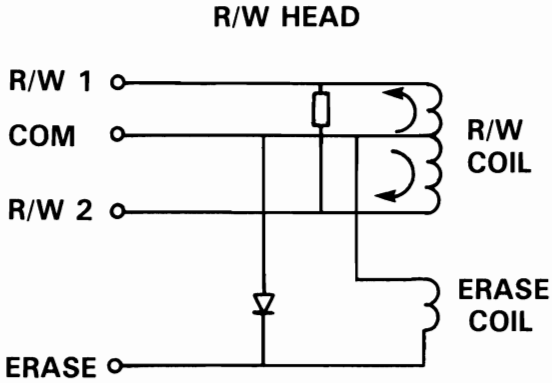

When data is being read from the disk, CEMF is induced into the R/W coil by the magnetic fields on the disk, causing current flow which is detected by the read amplifiers. Current flow through the R/W coil will forward bias either CR6 or CR11, depending on the direction. Q3 and CR9 must be forward biased. The first amplifier, UH7, senses this current flow from the R/W coil on one of the inputs and amplifies it. L8, L9, L10, L11, and C16 act as a low pass filter, suppressing noise on the amplified output. UH5 is a differential amplifier which amplifies the difference of the two input signals from the filter section. UH4 is a peak detector. The output of UH4 will pulse "high" when a "1" is read. This signal is the reconstruction of data recorded. The time domain filter, UG3 times out when a "1" bit has been read, so unwanted "1" bits are not added to the actual data. The one shot, UG3 generates the correct data pulse width so the read/write logic circuits can convert it to parallel for processor control.

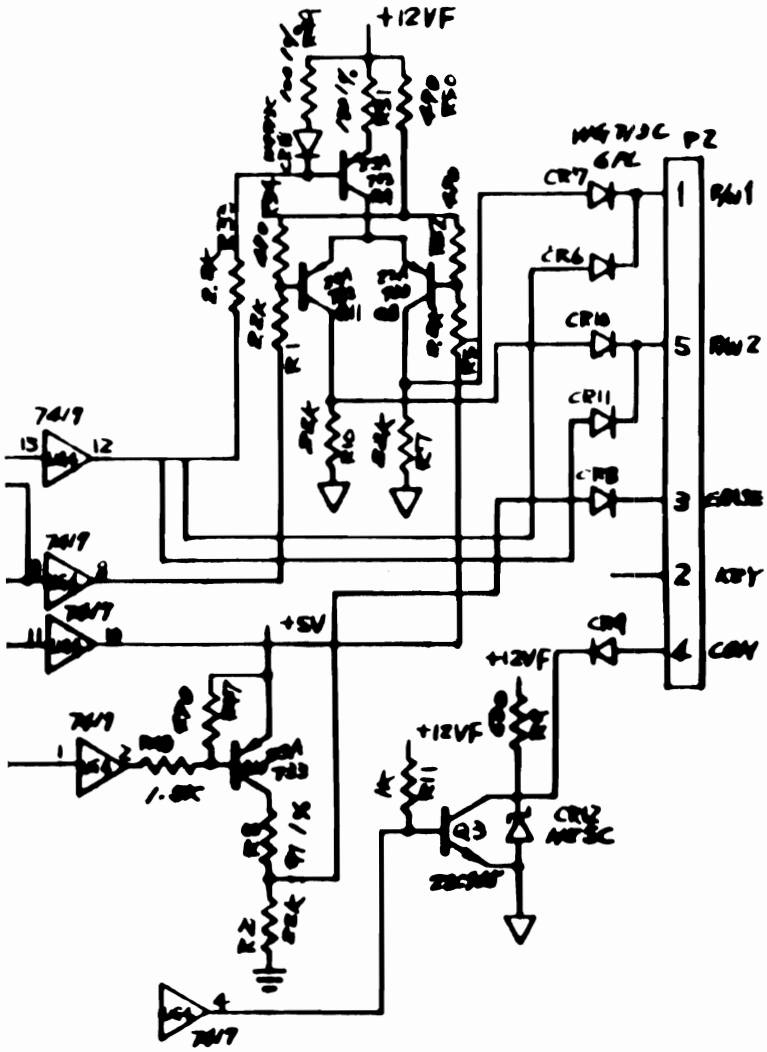

Write Amplifier Circuits

During a write operation, UG4, pin 3, must be ''high''. This forward biases Q3 and CR9.

If Q, of UF6, pin 9, goes ''low'', Q8 and CR7 become forward biased, passing current flow through R/W 1. If $\overline{Q}$, goes ''low'', Q11 and CR10 become forward biased, passing current flow through R/W 2.

When a write operation occurs, the ERASE coil is energized by forward biasing Q10. This demagnetizes the outer edges of the track, preventing data on one track from bleeding into the next track.

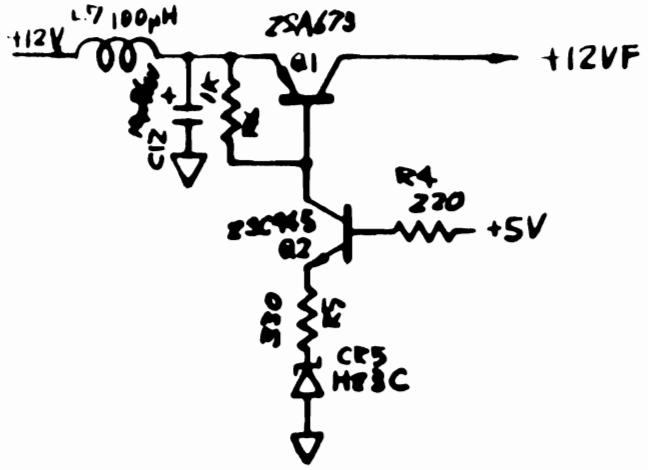

Power Up/Down Write Protection

This circuit prevents erroneous data from being written on the disk during power up/down sequences. During a power up, the 12VDC supply is not applied to the R/W coils and amplifier circuits before the processor has control of the logic. During a power down, the 12VDC supply is removed from the R/W coils and amplifier circuits before the processor loses control of the logic.

Q1 acts as a series pass transistor biased to regulate the 12VF output to the R/W coils and amplifier circuits. Q2 is a feedback amplifier monitoring the 5VDC supply. CR5 develops a precise reference voltage for Q2. L7 and C12 delay the 12VDC supply.

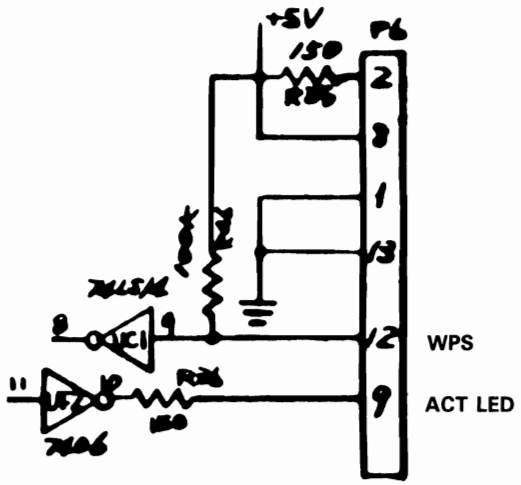

Write Protect Switch

Connector P6 connects the control circuits to the W/P switch and activity light. UCD4, a 6522 VIA, monitors the state of the write protect sensor on pin 14 and controls the red activity LED on pin 13.

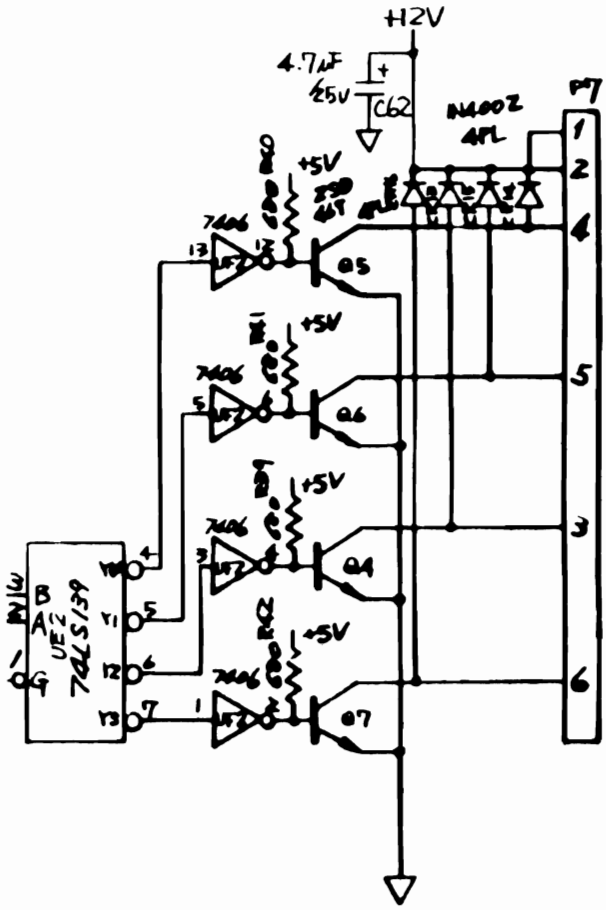

Stepper Motor Control Circuits

The stepper motor is controlled by two outputs on port B of UCD4, the 6522 VIA, STP0 and STP1. These two lines are converted by UE2 to a binary four count to drive the four phases of the stepper motor.

Outputs Y0, Y1, Y2, and Y3 from UE2 are inverted by UF2. The outputs of the inverters drive Q4-Q7. The current output from these transistors drives the individual phase coils in the stepper motor and returns, to the 12VDC supply. CR13-CR16 suppress the CEMF developed by the motor coils.

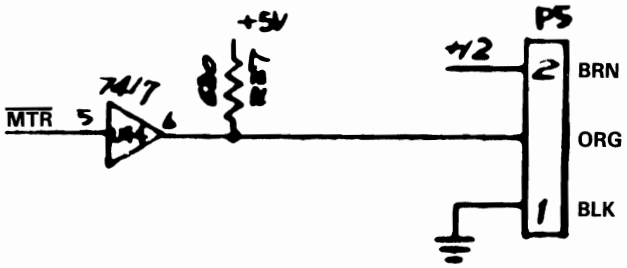

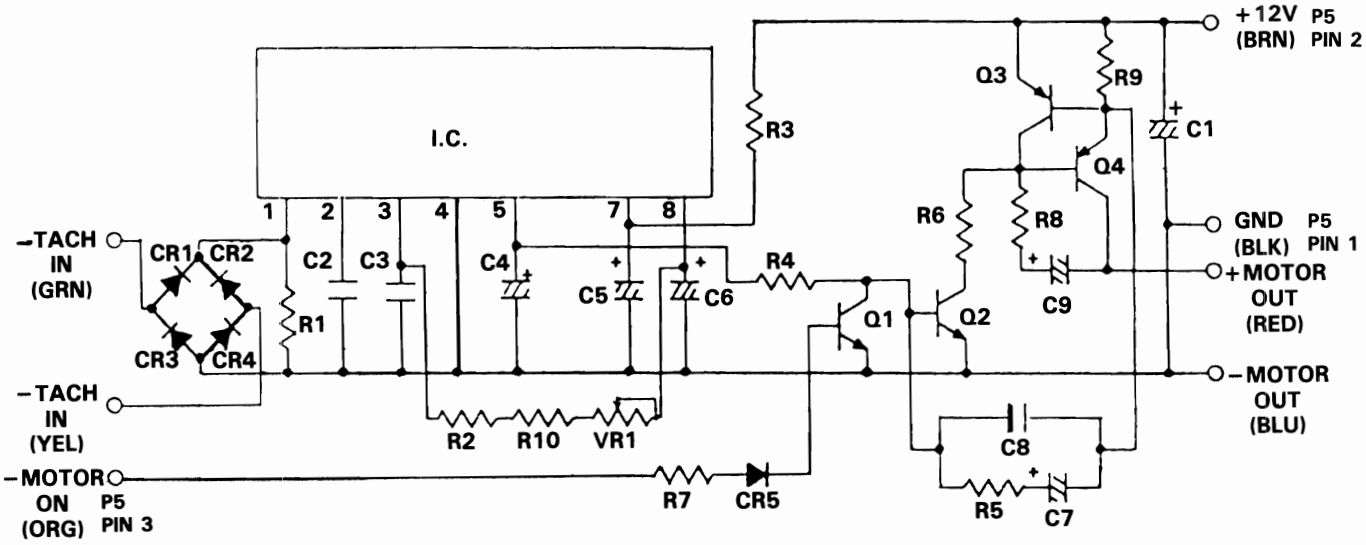

Spindle Motor Control Circuits

$\overline{\text{MTR}}$ output from UF2 pin 8 is passed through current driver UG4 to the motor control PCB. When $\overline{\text{MTR}}$ is "low", Q1 is biased off, and Q2, Q3, and Q4 are biased on, allowing current flow through the spindle motor coil. Attached to the shaft of the spindle motor is an inductive tachometer that generates low level AC voltages, as the motor spins. The output of the tachometer is rectified by CR1-CR4. IC 1 monitors the output of the rectifier and adjusts the bias to Q2, which changes the bias on Q3 and Q4 to regulate motor current for a constant velocity. VR1 is a manual speed adjustment. The speed can be adjusted by watching the 60Hz strobe as the adjustment is made or loading the system test from the diagnostic disk.

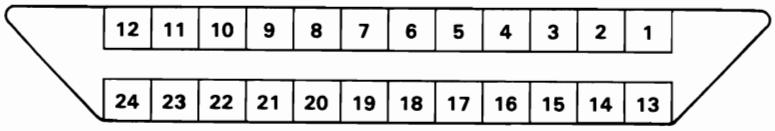

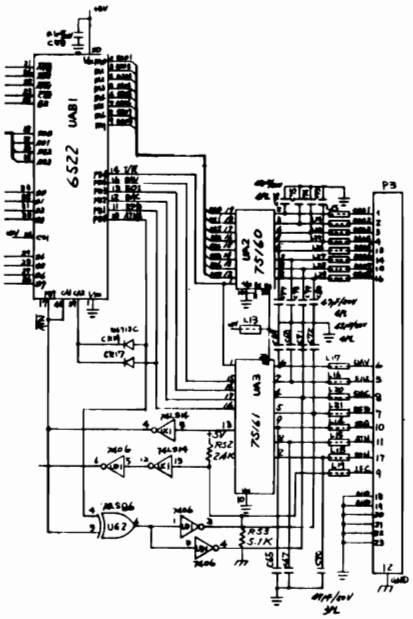

IEEE Interface

All of the signals on the interface are controlled by the I/O device UAB1. Eight parallel bi-directional data lines, PA0-PA7, are used as the parallel data bus for the interface. UA2 is an octal bus transceiver used to provide communication on the general purpose interface bus, GPIB, between operating units of the system. The data transfer and bus-management signals are communicated by UA3, thus completing the 16-line interface of the IEEE-488 bus.

DAV	Data Valid	DAV low signifies data is valid on the data bus.
EOI	End or Identify	CBM always sets EOI low while the last data byte is being transferred.
DAC	Data Not Accepted	DAC is low when data is being read and returned high after the last data byte is read.
RFD	Not Ready For Data	RFD is low until all receivers are ready to accept data, then the line will go high.
SRQ	Service Request	Not implemented in BASIC but available to the CBM user.
ATN	Attention	The host sets the signal low while sending commands on the data bus.
REN	Remote Enable	REN is held low by the bus controller and the host has this pin permanently grounded.
IFC	Interface Clear	The host sends its internal reset signal as IFC low to initialize all devices.

PARTS LIST
PCB ASSEMBLY #1540033

PLEASE NOTE:
Commodore part numbers are provided for reference only and do not indicate the availability of parts from Commodore. Industry standard parts (Resistors, Capacitors, Connectors) should be secured locally. Approved cross-references for TTL chips, Transistors, etc. are available in manual form through the Service Department, order part #314000-01. Unique or non-standard parts will be stocked by Commodore and are indicated on the parts list by a "C". Vendor Name and part number have been provided for your convenience in ordering custom or unique parts.

INTEGRATED CIRCUITS

UAB1	6522 VIA	C 901437-01
UAB4	ROM $C000-$DFFF	C 901484-03
UAB5	ROM $E000-$FFFF	C 901484-05
UCD4	6522 VIA	C 901437-01
UCD5	6502 CPU	C 901435-01
UA2	75160 Transceiver	901493-01
UA3	75161 Transceiver	901494-01
UA4	74LS00	901521-01
UB2	TMM2016 RAM	325502-01
UB6	74LS04	901521-02
UB7	74LS00	901521-01
UB8	74LS42	901521-17
UC1	74LS14	901521-30
UC2	74LS133	901521-15
UC3	74LS245	901521-45
UC6	74177	901522-03 Sub:
	74LS197	901521-54
UD1	7406	901522-06
UD2	74LS164	901521-28
UD3	74LS165	901521-12
UE2	74LS139	901521-18
UE3	74LS191	901521-40
UE4	74LS74	901521-06
UE5	74LS02	901521-21
UE7	74LS193	901521-26
UF1	555 Timer	901523-01
UF2	7406	901522-06
UF3	74LS10	901521-24
UF4	74LS193	901521-26
UF5	74LS00	901521-01
UF6	74LS74	901521-06
UG2	74LS86	901521-32
UG3	9602 One Shot	901510-01
UG4	7417	901522-01
UH4	311 OP AMP	901523-04
UH5	592	901523-08
UH7	592	901523-08

TRANSISTORS

Q1	2SA673
Q2,3	2SC945 Sub:
	2SC1815
Q4-7	2SD467 Sub:
	2SC2120
Q8-11	2SA733 Sub:
	2SA1015

DIODES

CR1	1.5 A, 50V, Bridge Rectifier
CR2	1N4002 Signal
CR3	4 A, 50V, Bridge Rectifier
CR4	1N4002 Signal
CR5	1N5226B, 3.3V, 500mW, Zener Sub:
	HZ3C-2, 3.3V, 500mW, Zener Sub:
	HZ4A-1, 3.3V, 500mW, Zener Sub:
CR6-11	1N4148 Signal
CR12	1N5131B, 5.1V, 500mW, Zener
	HZ5C-2, 5.1V, 500mW, Zener
CR13-16	1N4002 Signal
CR17-19	1N4148 Signal

RESISTORS — All Values are in ohms- 1/4 W 5% unless noted otherwise.

R1	2.2K	R10	22K
R2	22K	R11	1K
R3	47	R12,13	9.1K, 1/4W, 1%
R4	220	R14,15	2.2K
R5	330	R16,17	220
R6	1K	R18,19	150
R7	22K	R20	330
R8	91, 1/4W, 1%	R21-23	2K
R9	680	R24	510

RESISTORS (Continued)

25	360	R39-42	680
R26	8.2K	R43	47K
R27,28	470	R44	1K
R29	22K	R45	220
R30	360	R46	100K
R31	150, 1/4W, 1%	R47	470
R32	470	R48	1.5K
R33	2.2K	R49	100, 1/4W, 1%
R34	470	R50	470
R35,36	150	R51	2.2K
R37	680	R52	2.4K
R38	1M	R53	5.1K

CAPACITORS

C1	Electrolytic	1μF, 25V	
C2	Elect	47μF, 16V	
C3	Ceramic	.1μF, 50V	
C4	Electrolytic	1μF, 25V	
C5	Elect	47μF, 16V	
C6-11	Ceramic	.1μF, 50V	
C12	Tantalum	10μF, 25V	
C13,14	Ceramic	.1μF, 50V	
C15	Tantalum	.47μF, 16V	+/-20%
C16	Ceramic	680pF, 50V	+/-5%
C17-22	Ceramic	.1μF, 50V	
C23	Tantalum	3.3μF, 25V	
C24	Tantalum	.47μF, 16V	+/-20%
C25	Ceramic	.1μF, 50V	
C26	Ceramic	1000pF, 50V	
C27	Ceramic	680pF, 50V	+/-5%
C28	Ceramic	330pF, 50V	+/-5%
C29-32	Ceramic	.1μF, 50V	
C33	Ceramic	47pF, 50V	
C34,35	Ceramic	.1μF, 50V	
C36	Electrolytic	10μF, 16V	
C37-42	Ceramic	.1μF, 50V	
C43	Ceramic	.01μF, 50V	
C44-48	Ceramic	.1μF, 50V	
C49	Ceramic	330pF, 50V	+/-5%
C50	Ceramic	680pF, 50V	+/-5%
C51	Electrolytic	6800μF, 25V	
C52	Electrolytic	10000μF, 16V	
C53-57	Ceramic	.1μF, 50V	
C58,59	Ceramic	.022μF, 50V	
C60,61	Ceramic	.1μF, 50V	
C62	Tantalum	4.7μF, 25V	
C63	Tantalum	1μF, 35V	
C64	Ceramic	.033μF, 25V	
C65	Electrolytic	220μF, 25V	
C66-80	Ceramic	47pF, 50V	
C81	Ceramic	.1μF, 50V	

MISCELLANEOUS

P1	Header Assy	Molex # 5271-04A
P2	Header Assy	5049-04AG
P3	Rt Angle Cnnct IEEE	C 903206-01
P5	Header Assy	Molex # 3094-03A
P6	Header Assy	3094-15A
P7	Header Assy	3094-06A
P8	Header Assy	3094-03A
L1	Inductor 2.2μH	
L2-6	Ferrite Bead	
L7	Inductor 100μH	
L8	Inductor 22μH	
L9,10	Inductor 100μH	
L11	Inductor 22μH	
L12-29	Ferrite Bead	
VR1	Voltage Regulator, 12V, 1.5A, LM340	
VR2	Voltage Regulator, 5V, 3A, LM323	
Y1	Crystal Module, 16 MHz	C 325566-01
	Shield Box	4022048-01
	Shield Cap	4022047-01

PCB ASEMBLY #1540033
BOARD LAYOUT

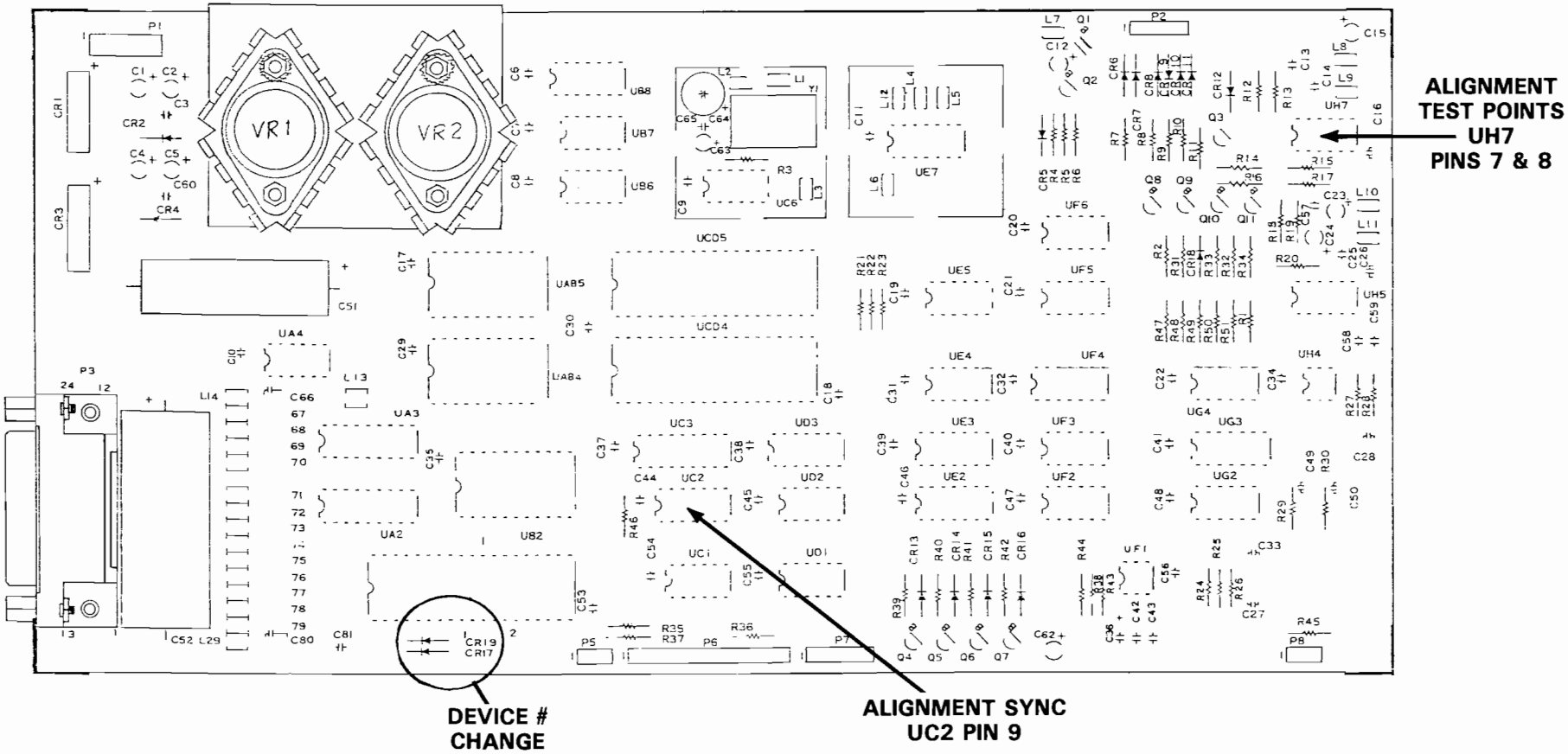

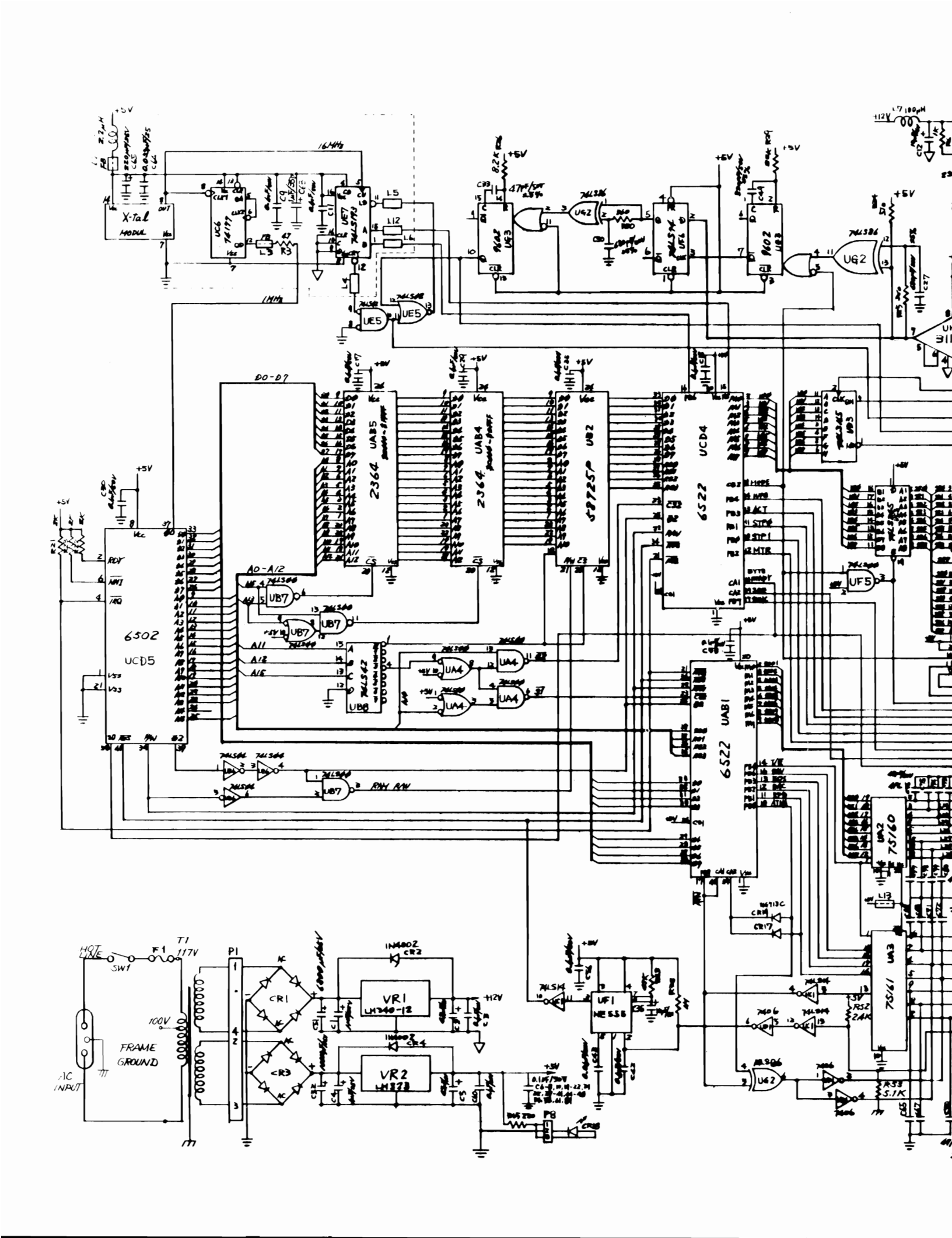
X-tal
MODUL
16MHz
1MHz
D0-D7
A0-A12
6502
UCD5
2364
UAB5
2364
UAB4
87257P
UB2
6522
UCD4
6522
UAB1
74LS42
UB8
UB7
UA4
UF5
UG2
UE5
UE7
74LS193
UC6
74177
UF1
NE555
UA2
75160
UA3
75161
VR1
LM340-12
VR2
LM323
CR1
CR3
CR2
CR4
CR17
T1
117V
HOT LINE
SW1
F1
P1
100V
FRAME GROUND
AC INPUT
+12V
P8

SCHEMATIC 1540039

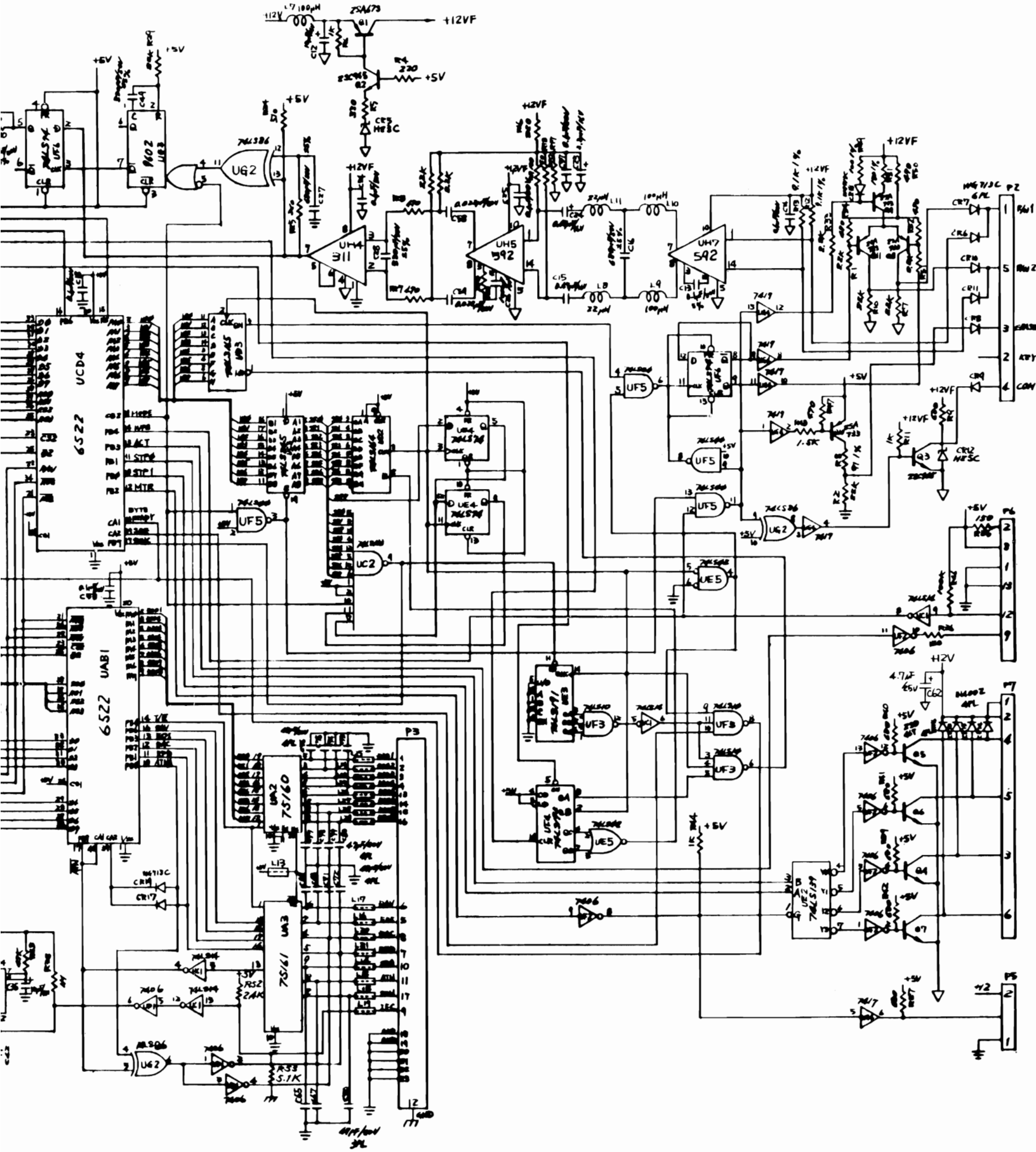

1540/41/2031 LP POWER SUPPLY ASSEMBLY PARTS LIST

FUSE HOLDER	903614-01
ROCKER SWITCH	904509-01
POWER CNNCT FILTER	903467-03 sub:
	325552-01
FUSE, SLOW BLO, 250V, 1.0A	903556-16
POWER TRANSFORMER	1540009-02

2031 LOW PROFILE POWER SUPPLY #1540002-01

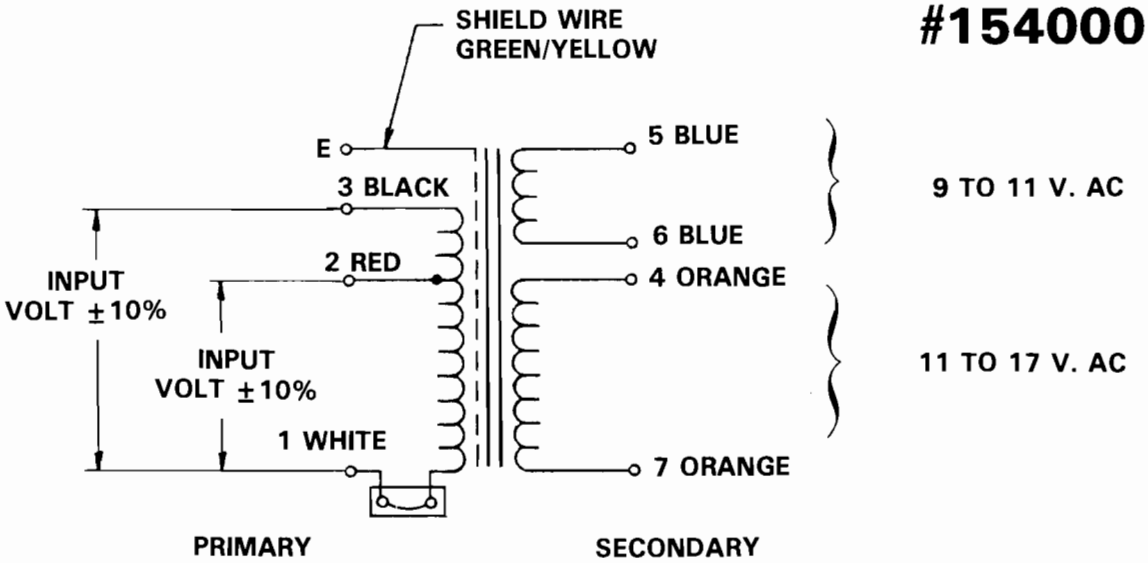

TRANSFORMER

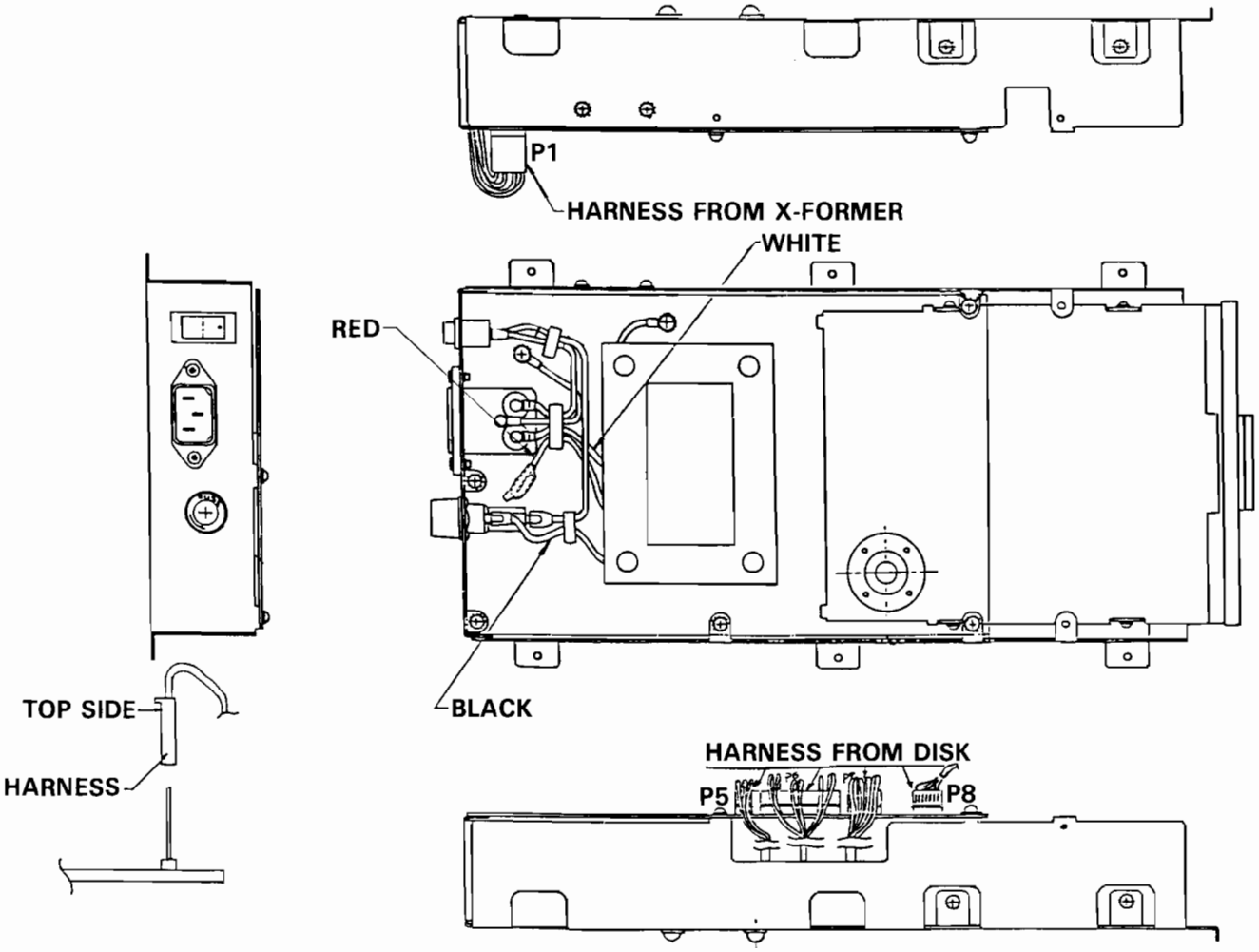

ASSEMBLY DRAWING

RESISTANCE CHECKS
LOW PROFILE — ALPS DRIVE

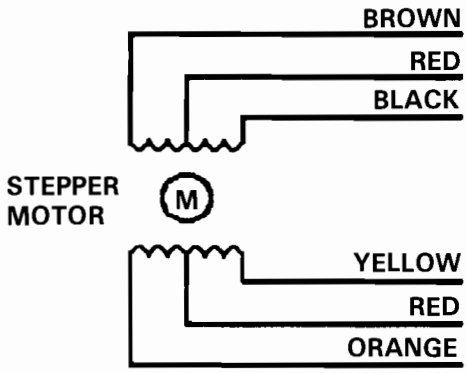

32 OHMS END TO CENTERTAP

64 OHMS END TO END

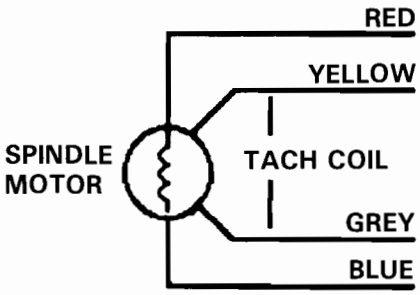

MOTOR COIL = 17 OHMS

TACH COIL = 175 OHMS AT REST

TACH COIL = 135 — 190 OHMS IN MOTION

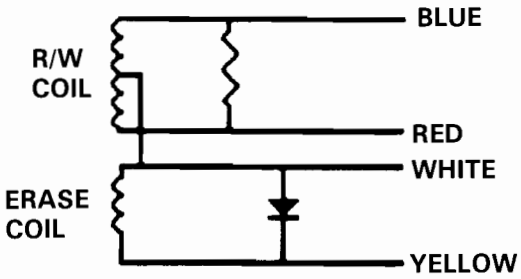

R/W END TO END = 32.4 OHMS

R/W END TO CENTERTAP = 16.3 OHMS

ERASE COIL END TO END = 10.5 OHMS

PARTS LIST

32551901 Alps Drive (Black)

32551902 Alps Drive (Brown)

(1) 31410001 ALP DOOR/HUB ASSEMBLY
- 1-Door Assy w/Spring
- 2-Hub/Collet Assy
- 3-Arm Support Assy

(2) 31410101 ALP LEFT DISK GUIDE ASSEMBLY
- 1-Diskette Guide
- 2-LED Assy w/Harness
- 3-Write Protect Assy

(3) 31410201 ALP RIGHT DISK GUIDE

(4) 31410301 ALP FRONT BEZEL (Black)

31410302 ALP FRONT BEZEL (Brown)

(5) 31410401 ALP R/W HEAD ASSEMBLY
- 1-R/W Head
- 2-Load Arm w/Pad
- 3-Metal Band

31410501 ALP STEPPER MOTOR ASSEMBLY
- 1-Stepper Motor w/Harness
- 2-Stepper Pulley

(6) 31410601 ALP D.C. MOTOR

(7) 31410701 ALP MOTOR CONTROL PCB ASSEMBLY
- 1-Motor Control PCB
- 2-Harness Assy

(8) 31410801 ALP TENSION PULLEY ASSEMBLY
- 1-Pulley Wheel w/Spring
- 2-Plastic Housing

(9) 31410901 ALP HOUSING/SPINDLE ASSEMBLY
- 1-Housing Base
- 2-Spindle Assy
- 3-L/R Guide Shafts

31411001 ALP DRIVE BELT

(10) 31411101 ALP EJECT ASSEMBLY
- 1-Eject Plate
- 2-Eject Spring

31411201 ALP HARDWARE
- 1-Assorted Screws
- 2-Zero Stop Tab

31417401 UNIV Replacement Load Pad

ALPS DRIVE ASSEMBLIES
1540/1541/2031 LP

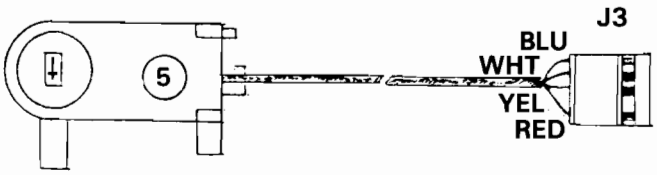

READ/WRITE HEAD ASSEMBLY

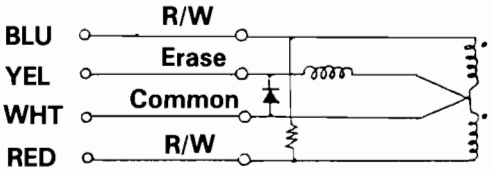

MOTOR CONTROL P.C.B.

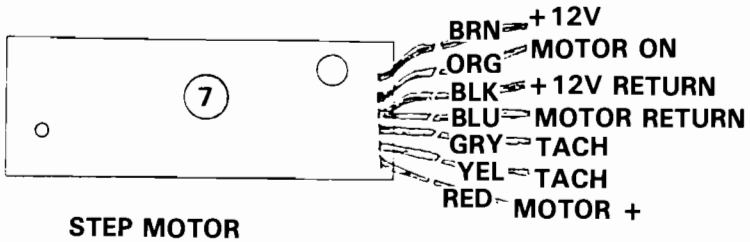

DC MOTOR CONTROL PCB

FUNCTION

STEP MOTOR

J4

J6

J5

RETURN BLK
+12 BRN
MOTOR ON ORG

W/P BLU BRN

LED RED BLK

W/P ORG PUR

+12V RED
+12V RED
A BRN YEL
B BLK ORG
$\overline{A}$ YEL BLK
$\overline{B}$ ORG BRN

6
10
2
3
9
8
1
4

W/P TRANISTOR:
ORG
PUR

DIODE:
BRN
BLU

LED:
RED
BLK

DC MOTOR CONTROL PCB

ALPS MOTOR CONTROL BOARD SCHEMATIC

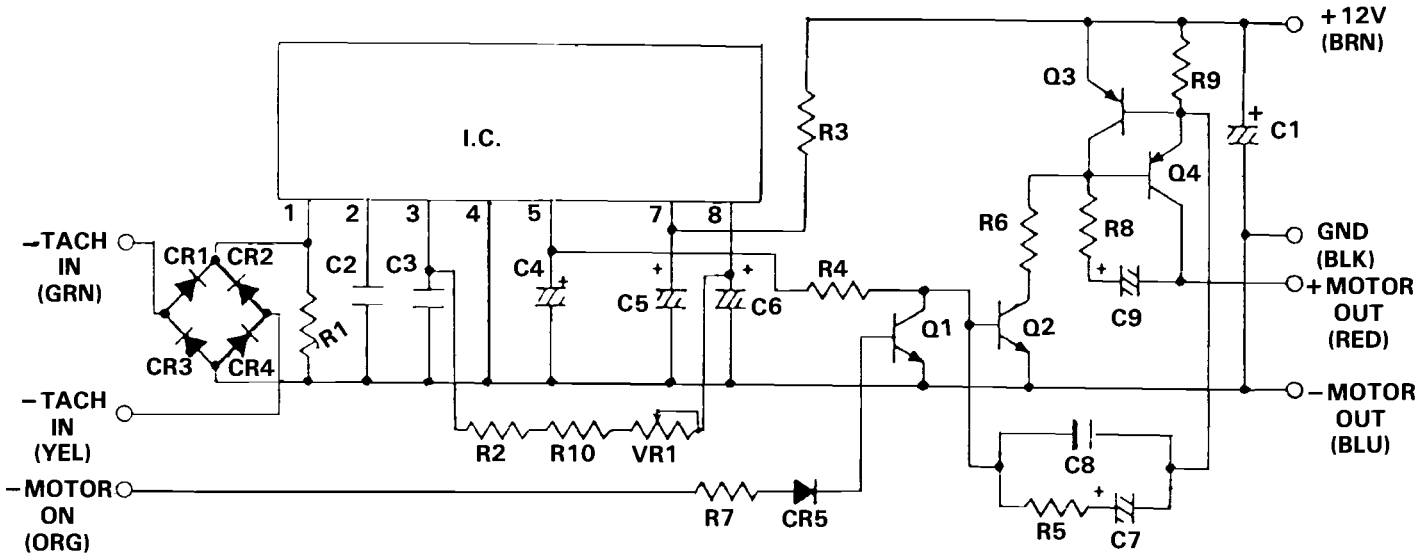

SYMBOL	DESCRIPTION		
I.C.	Sony CX-065B	R6	Resistor, 820Ω, 1/4W
Q1	Transistor 2SC2785	R8	Resistor, 150Ω, 1/4W
Q2	Transistor 2SC2785	R9	Resistor, 0.68Ω, 2W
Q3	Transistor 2SA1175	R10	Resistor, 5.1kμ, 1/8W
Q4	Transistor B703-Q36E	VR1	Variable Resistor, 20kΩ
CR1,2,3,4,5	Diode IN4148	C1,5,6	Capacitor, Electrolytic, 10μF, 35V
R1,7	Resistor, 1kΩ, 1/4W	C2	Capacitor, 0.0047μF, 50V
R2	Resistor, 68kΩ, 1/4W	C3	Capacitor, 0.033μF, 50V
R3	Resistor, 220Ω, 1/4W	C4,9	Capacitor, Tantalium, 0.47μF, 35V
R4	Resistor, 3.3kΩ, 1/4W	C7	Capacitor, Tantalium, 2.2μF, 16V
R5	Resistor, 2.7kΩ, 1/4W	C8	Capacitor, 0.068μF, 50V

(Fold In)

NAME:

COMPANY:

STREET:

CITY:

STATE

ZIP

DATE:

PHONE:

PLACE
STAMP
HERE

COMMODORE BUSINESS MACHINES
C-2654
West Chester, PA 19380

Service Documentation

Fold and Tape DO NOT STAPLE Fold and Tape