Commodore 4000 Series

Technical Manual

Model 4016/4032

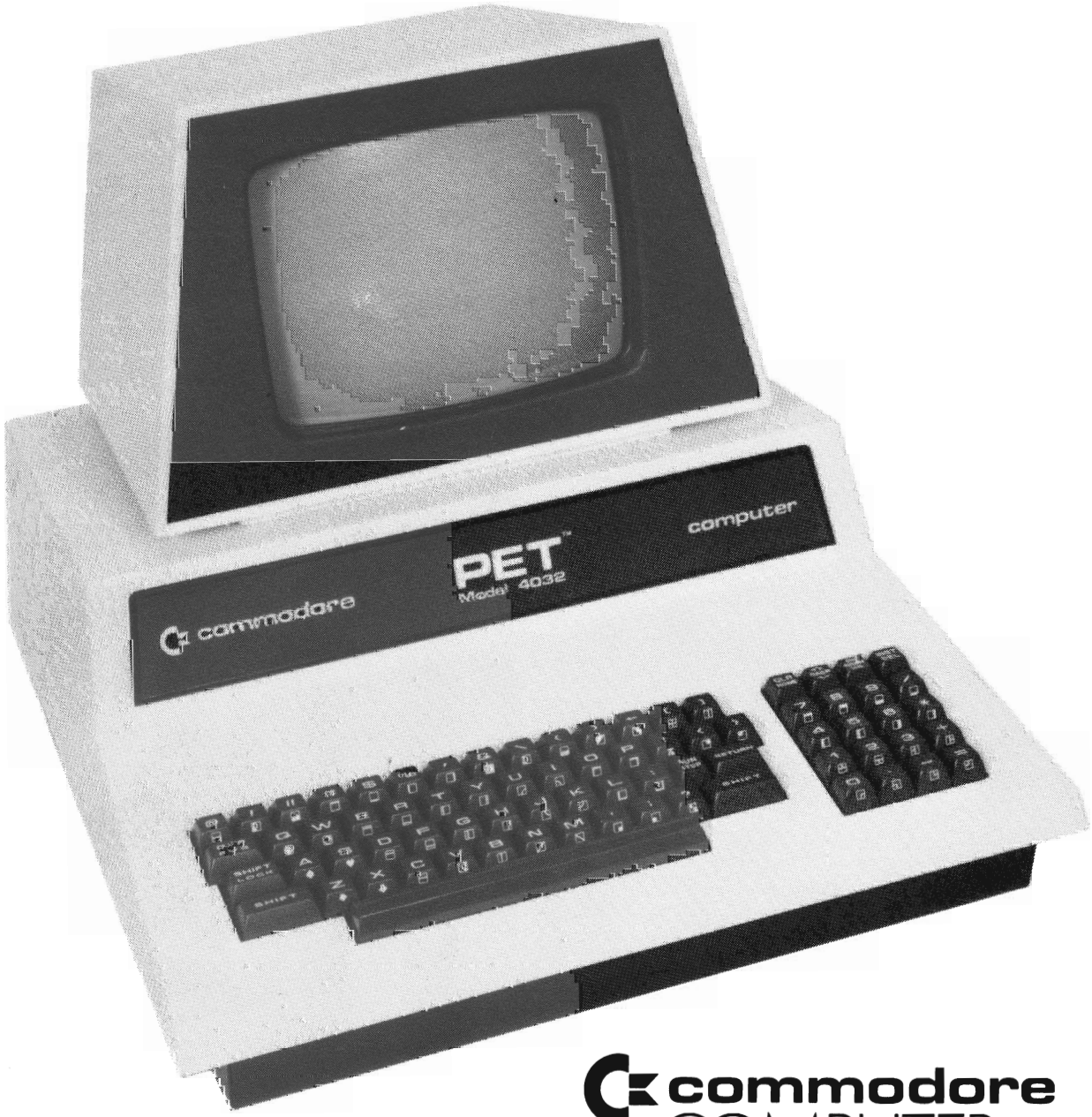

commodore
COMPUTER

P/N 990438

These documents are for repair service information only. Part numbers are for reference only. Only parts on current dealer parts list are available. No license is given for any use by possession of these documents and may not be reproduced in any form without the written approval of Commodore Electronics Limited.

PART NO.	DESCRIPTION
8032090-01	UNIV. DYNAMIC PET 8032-60Hz
-03	4032-60Hz (12")
-05	4016-60Hz
-07	UNIV. SUPER PET 9000 - 60 Hz
-09	UNIV. SUPERPET, COMBO-BRD 9000 - 60 Hz
8032090 - 11	UNIV. DYNAMIC PET, 4032-9" - 60 Hz

9 REWORK INSTRUCTIONS FOR FCC: JUMPER WIRE FROM UD3 PIN 1 TO UB14 PIN 35. USE 22 AWG (IT. 108). THIS CONFIGURATION IS FOR -09 & -10 ONLY.

8 UD11 & 12 NOT FOR -07, -08, -09 & -10

7 IDENTIFY WITH APPLICABLE DASH NO.

6 SOLDER TO XTAL AND PCB.

5 FOR ITEMS 118 & 119, ALL ASSEMBLIES MUST HAVE SAME VENDOR.

4 SOLDER JUMPER, ITEM 106 FROM E1 TO SILVER CONTACT ON MT1, ITEM 73; TAKE CARE TO ALLOW NO MOVE THAN ONE SECOND DURATION FOR APPLICATION OF HEAT DURING SOLDERING.

REVISIONS

LTR	ZONE	DESCRIPTION	DATE	APPROVED
A		PRODUCTION RELEASE	6/23/81	
B		REV PER ECO 2157	7/16/81	
C		REV PER ECO 2172	8/6/81	
D		REV PER ECO 2237	9/21/81	
D		REV PER ECO 2308	10/2/81	
E		REV PER ECO 2368	11/4/81	
E		PER ECO 2414	12/9/81	
F		REV PER ECO 2565 & 2555	3/18/82	
G		REVISED PER ECO 2887		
H		REVISED PER ECO 3027		

11 CUT PINS 9 & 10 AT UE7. CONNECT PIN 9 TO GND.

10 CONNECT ITEM 43 FROM PIN 15 OF UA19 TO VCC (+5V).

4 REFER TO PART SUBSTITUTION INDEX, P/N 321233.

3 SOLDER AT 3 PLACES, EQUALLY SPACED AROUND THE BRASS BASE MT1 (ITEM 73)

2 IDENTIFY WITH APPLICABLE DASH NO.

1. SHEET 6 OF 7 SIZE C, SHEET 7 OF 7 SIZE D.

NOTES: UNLESS OTHERWISE SPECIFIED:

commodore	TITLE: PCB ASSY - UNIV. DYNAMIC PET	DRAWN BY	DATE 3-11-81	ENGR	SIZE B	DRAWING NUMBER 8032090
		CHKD	6-17-81	APPR		SHEET 1 OF 7

QUANTITY REQD PER PART / DASH NO. 11	10	09	08	07	06	05	04	03	02	01	ITEM	DS	PART NUMBER	DESCRIPTION	REF DES	BEND	NOTES
1		1		1		1		1		1	1	D	8032088-01	FABRICATION-UNIV. DYNAMIC PET			
REF		REF		REF		REF		REF		REF	2	D	8032087-01	LOGIC DIAGRAM-UNIV. DYNAMIC PET			
-		1		1		-		-		-	3	B	901640-01	IC 2332	UA3		
3		3		3		3		3		3	4	B	901521-01	,74LS00	UD5,UE5,UE11		
3		3		3		3		3		3	5	B	901521-24	,74LS10	UD4,UE7,UE13		
1		1		1		1		1		1	6	B	901522-20	,7425	UE14		
1		1		1		1		1		1	7	B	901521-02	,74LS04	UE15		
1		1		1		1		1		1	8	B	901523-01	,LM555	UD16		
1		1		1		1		1		1	9	B	901522-01	,7417	UD15		
1		-		-		1		1		1	10	B	901435-01	,6502	UB14		
1		1		1		1		1		1	11	B	901479-01	,CRT CONTROLLER	UB13		
1		1		1		1		1		1	12	B	901522-13	,74154	UE12		
2		2		2		2		2		2	13	B	901436-01	,6520	UB12,UB16		
3		3		3		3		3		3	14	B	901524-01	,MC3446	UA20,UB17,UC12		
1		1		1		1		1		1	15	B	901437-01	,6522	UB15		
1		1		1		1		1		1	16	B	901521-09	,74LS145	UC11		
2		2		2		2		2		2	17	B	901521-45	,74LS393	UD3,UE6		
1		1		1		1		1		1	18	B	901521-21	,74LS02	UD1		
2		2		2		2		2		2	19	B	901525-09	,74S74	,UC1,UE1		
2		2		2		2		2		2	20	B	901525-01	,74S04	UD2,UE4		
2		2		2		2		2		2	21	B	901521-06	,74LS74	UB2,UB1		
1		1		1		1		1		1	22	B	901522-28	,74166	UA2		
1		-		-		1		1		1	23	B	901447-10	,2316	UA3		
1		1		1		1		1		1	24	B	901521-32	,74LS86	UC2		SEE NOTE 4
1		1		1		1		1		1	25	B	901521-28	,74LS164	UE3		SEE NOTE 4
1		1		1		1		1		1	26	B	901521-16	,74LS138	UC3		
4		4		4		4		4		4	27	B	901521-11	,74LS157	UC8-UC10,UE2		SEE NOTE 4
											28						
											29						
1		1		1		1		1		1	30	B	901465-22	,2332	UD6		
1		1		1		1		1		1	31	B	901465-21	,2332	UD8		
1		1		1		1		1		1	32	B	901465-20	,2332	UD9		
1		1		1		1		1		1	33	B	901465-23	,2332	UD10		
											34						
1		1		1		1		1		1	35	B	901522-04	IC ,7400	UF1		
1		1		1		1		1		1	36	B	900110-07	CAP, LOW LEAK. ELECT. 1µF 50V	C10		
56		56		56		56		56		56	37	B	900461-28	CAP, CERAMIC AXIAL .1µF 50V	C12-15,18,20-22,25-28,30-50,53,55-59,62-72,75,87,89,90,95,96		

commodore

TITLE: PCB ASSY-UNIV. DYNAMIC PET

DRWN BY: [illegible] DATE 3-11-81
CHKD: [illegible] DATE 6/7/81
ENGR: DATE
APPR:

SIZE B | 8032090 | REV H | SHT 2/7

QUANTITY REQD PER PART/DASH NO. 11	10	09	08	07	06	05	04	03	02	01	ITEM	BS	PART NUMBER	DESCRIPTION	REF DES	BEND	NOTES
3		3		3		3		3		3	38	B	900461-16	CAP, CERAMIC AXIAL .01µF 50V	C52,60,61		
2		2		2		2		2		2	39	B	900461-20	,CERAMIC AXIAL .022µF 50V	C3,4		
1		1		1		1		1		1	40	B	900100-45	,ELECTROLYTIC 4700µF25V	C5		
1		1		1		1		1		1	41	B	900100-44	,ELECTROLYTIC 470µF 16V	C2		
5		5		5		5		5		5	42	B	900109-03	,LOW LEAK.ELECT. 10µF 25V	C1,16,17,23,24		SEE NOTE 4
1		1		1		1		1		1	43	B	900050-21	,DIPPED MICA, RADIAL, 82pF, 500V	C97		SEE NOTE 10
2		2		2		2		2		2	44	B	900402-13	,TANTALUM 1µF 35V	C6, ,51		
2		2		2		2		2		2	45	B	900101-37	,ELECTROLYTIC 47µF 16V	C7,11		
1		1		1		1		1		1	46	B	900463-08	,CERAMIC AXIAL 820 pF	C92		
14		14		14		14		14		14	47	B	900462-29	CAP ,CERAMIC AXIAL 47pF	C74-C86, C88		
											48						
2		2		2		2		2		2	49	B	901550-84	RES, CARBON 1/4W 5% 1M	R24,25		
3		3		3		3		3		3	50	B	901550-58	470Ω	R13,16,17		
4		4		4		4		4		4	51	B	901550-94	68Ω	R10, 11, 46, 49		
2		2		2		2		2		2	52	B	901550-03	5.1K	R19,21		
2		2		2		2		2		2	53	B	901550-85	2.4K	R18,20		
1		1		1		1		1		1	54	B	901550-64	10Ω	R8		
2		2		2		2		2		2	55	B	901550-20	10K	R23,27		
2		2		2		2		2		2	56	B	901550-69	1.5K	R47,48		
8		8		8		8		8		8	57	B	901550-49	100Ω	R32-38, 40		
1		1		1		1		1		1	58	B	901550-19	4.7K	R51		
1		1		1		1		1		1	59	B	901550-18	2.2K	R53		
2		2		2		2		2		2	60	B	901550-56	47Ω	R50,52		
											61						
											62	B					
											63	B					
1		1		1		1		1		1	64	B	901550-93	39Ω	R7		
16		16		16		16		16		16	65	B	901550-01	1K	R1-6,12,15,22,26,28,39,42-45.		
1		1		1		1		1		1	66	B	901550-02	,CARBON 1/4W 5% 3.3K	R14		
1		1		1		1		1		1	67	B	902419-66	RES, NETWORK, DIP 14 PIN 10K	UB11		
											68						
2		2		2		2		2		2	69	B	902653-01	TRANSISTOR, TIP 29	Q1,Q2		
1		1		1		1		1		1	70	B	902550-01	TRANSISTOR, PACK Q2T2222	UE16		
											71						
											72						
1		1		1		1		1		1	73	B	907300-02	TRANSDUCER-PIEZO ACOUSTIC	MT1		
											74						

commodore

TITLE: PCB ASSY-UNIV. DYNAMIC PET

DRWN BY: [illegible] DATE 3-11-81
CHKD: [illegible] DATE 6-17-81
ENGR: DATE
APPR:

SIZE B | 8032090 | REV H | SHT 3/7

QUANTITY REQD PER PART / DASH NO. 11	10	09	08	07	-06	-05	-04	-03	-02	-01	ITEM	DS	PART NUMBER	DESCRIPTION	REF DES	BEND	NOTES
											75						
3		3		3		3		3		3	76	B	900750-05	DIODE, 1N4005	CR1,5,7		
2		2		2		2		2		2	77	B	900757-01	, BRIDGE 4A/50V	CR2,4		SEE NOTE 4
1		1		1		1		1		1	78	B	900753-01	, 1N5402 3A/200V	CR3		
											79						
											80						
2		2		2		2		2		2	81	B	900941-01	DIODE, ZENER 7.5V	VR5,6		
											82						
1		1		1		1		1		1	83	B	901527-03	VOLTAGE REGULATOR, 7905, -5V/1.5A	VR1		TO-220
											84						
1		1		1		1		1		1	85	B	901528-04	VOLTAGE REGULATOR, 7812, +12V/1A	VR2		TO-3
1		1		1		1		1		1	86	B	901528-01	VOLTAGE REGULATOR, LM323	VR4		
											87						
1		1		1		1		1		1	88	B	900556-02	CRYSTAL 16MHZ	Y1		
											89						
1		1		1		1		1		1	90	B	903326-07	HEADER ASSY .100 CENTER	J10		7 PIN; REMOVE PIN 3 AT ASSEMBLY
2		2		2		2		2		2	91	B	903345-25	HEADER ASSY, DUAL ROW .100 CENTER	J4,9		50 PIN
1		1		1		1		1		1	92	B	903316-09	HEADER ASSY .156 CENTER	J8		9 PIN; REMOVE PIN 7 AT ASSEMBLY
1		1		1		1		1		1	93	B	903331-07	HEADER ASSY, POLARIZED .100 CENTER	J11		7 PIN; REMOVE PIN 3 AT ASSEMBLY
1		1		1		1		1		1	94	B	903331-07	HEADER ASSY, POLARIZED .100 CENTER	J7		7 PIN; ORIENT OMITTED PIN TO PIN 6 POSITION
1		1		1		1		1		1	95	B	903331-20	HEADER ASSY, POLARIZED .100 CENTER	J5		20 PIN; ORIENT OMITTED PIN TO PIN 19 POSITION
											96						
4		2		2		4		4		4	97	B	904150-04	SOCKET, IC LOW PROFILE 24 PIN	UA3, UD7, UD11, UD12		SEE NOTE 8
1		1		1		1		1		1	98	B	904150-06	SOCKET, IC LOW PROFILE 40 PIN	UB14		
1		1		1		1		1		1	99		904150-01	SOCKET IC LOW PROFILE 14 PIN	UF1		
2		2		2		2		2		2	100	B	901151-17	COIL, INDUCTOR 2.2uh	L1, L2		
1		1		1		1		1		1	101	B	320086-02	BUS WIRE			
											102						
4		4		4		4		4		4	103	B	906403-19	RIVET, DOME HEAD, OPEN END			
2		2		2		2		2		2	104	B	906404-04	RIVET, DOME HEAD, CLOSED END			
											105						
1		1		1		1		1		1	106	B	903780-01	#30 WIRE WRAP WIRE, RED			
20		20		20		19		20		20	107	B	903781-01	22 AWG BARE WIRE ON TAPE & REEL			
—		A/R		A/R		—		—		—	108	B	903755-03	WIRE, INSULATED, 22 AWG, 12.5 LG			
1		1		1		1		1		1	109	B	320268-01	HEAT SINK			
A/R		A/R		A/R		A/R		A/R		A/R	110	B	904907-01	HEAT SINK, COMPOUND THERMAL			
											111						

commodore

TITLE: PCB ASSY-UNIV. DYNAMIC PET

DRWN BY: [illegible] DATE 3-11-81
CHKD: [illegible] DATE 6-17-81
ENGR: DATE
APPR:
SIZE B 8032090 REV H SHT 4/7

QUANTITY REQD PER PART / DASH NO.											ITEM	DS	PART NUMBER	DESCRIPTION	REF DES	BEND	NOTES
11	-10	09	08	07	-06	-05	-04	-03	-02	-01							
–		11		11		–		–		11	112	B	901521-13	IC, 74LS244	UB4-UB7, UB9, UB10, UD13, UD14, UE8-UE10		
9		–		–		9		9		–	113	B	901521-13	, 74LS244	UB4, UB5, UB9, UB10, UD13, UD14, UE8-UE10		
–		2		2		–		–		2	114	B	901521-29	, 74LS373	UB3, UB8		
1		–		–		1		1		–	115	B	901521-29	, 74LS373	UB3		
–		4		4		–		–		4	116	B	901453-02	, 2114	UC4-UC7		
2		–		–		2		2		–	117	B	901453-02	, 2114	UC4, UC5		
16		16		16		–		16		16	118	B	901470-01	, 4116	UA4-UA19		
–		–		–		8		–		–	119	B	901470-01	, 4116	UA5, UA7, UA9, UA11, UA13, UA15, UA17, UA19		
–		1		1		–		–		1	120	B	901474-03	, 2316	UD7		
–		–		–		–		–		–					UD7		
–		–		–		1		1		–	122	B	901499-01	, 2316	UD7		
–		–		–		–		–		–					UD7		
1		–		–		–		–		–	124	B	970150-07	IC, 2516 EPROM	UD7		
											125						
28		28		28		28		28		28	126	B	903025-01	FERRITE BEAD	FB1-26, 28, 29		
1		1		1		1		1		1	127	B	4022048-01	SHIELD BOX			
1		1		1		1		1		1	128	B	4022047-01	SHIELD CAP			
											129						
1		1		1		1		1		1	130	B	900461-22	CAP CERAMIC AXIAL, .033 μF, 50V	C94		
1		1		1		1		1		1	131	B	900461-24	CAP, CERAMIC AXIAL, .047 μF, 50V	C93		
1		1		1		1		1		1	132	B	900463-04	CAP, CERAMIC AXIAL, 100 pF, 50V	C91		
											133						
											134						
											135						
											136						
											137						
											138						
											139						
											140						
											141						
											142						
											143						
											144						
											145						
											146						
											147						
											148						

commodore	TITLE: PCB ASSY-UNIV. DYNAMIC PET	DRAWN BY:	DATE 3-11-81	ENGR:	DATE	SIZE B	8032090	REV H	SHT 5/7
		CHKD:	6-17-81	APPR:				

REVISIONS				
LTR	ZONE	DESCRIPTION	DATE	APPROVED
		SEE SHEET 1		

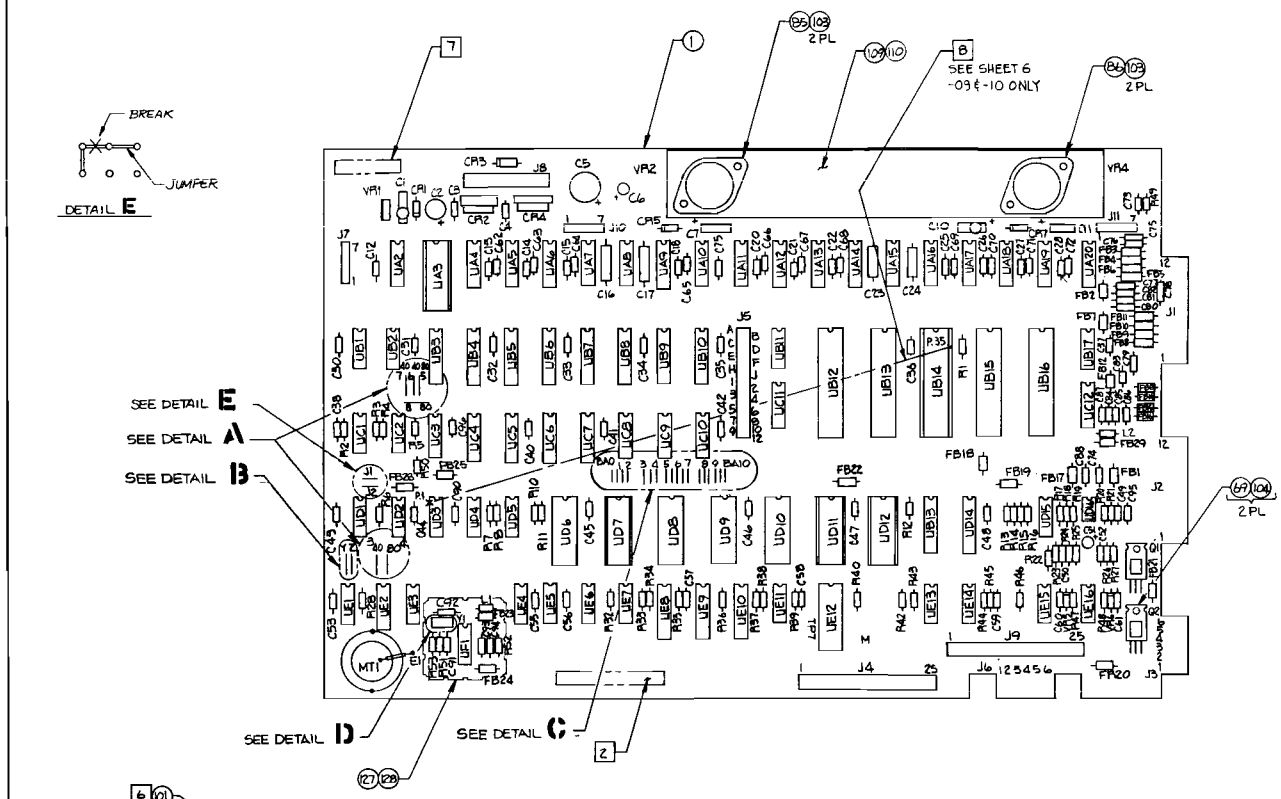

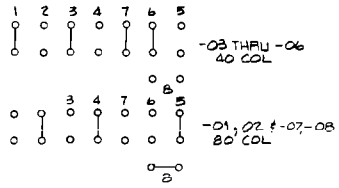

DETAIL A
SCALE : NONE
JUMPER CONFIGURATIONS

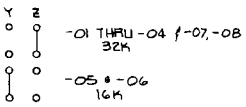

DETAIL B
SCALE: NONE

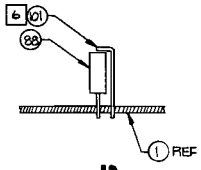

DETAIL D
SCALE: NONE

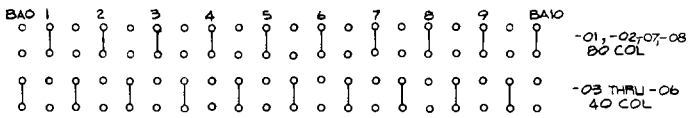

DETAIL C
SCALE: NONE
JUMPER CONFIGURATIONS

-01 THRU -10 SHOWN

UNLESS OTHERWISE SPECIFIED TOLERANCES ON DECIMALS	DRAWN BY	DATE	commodore
	CHKD		PCB ASSY - UNV. DYNAMIC PET
	ENGR		
	APPR		
MATERIAL	USED ON	NEXT ASSY	SIZE D 8032090 REV H
FINISH			SCALE 1/1 SHEET 7 OF 7

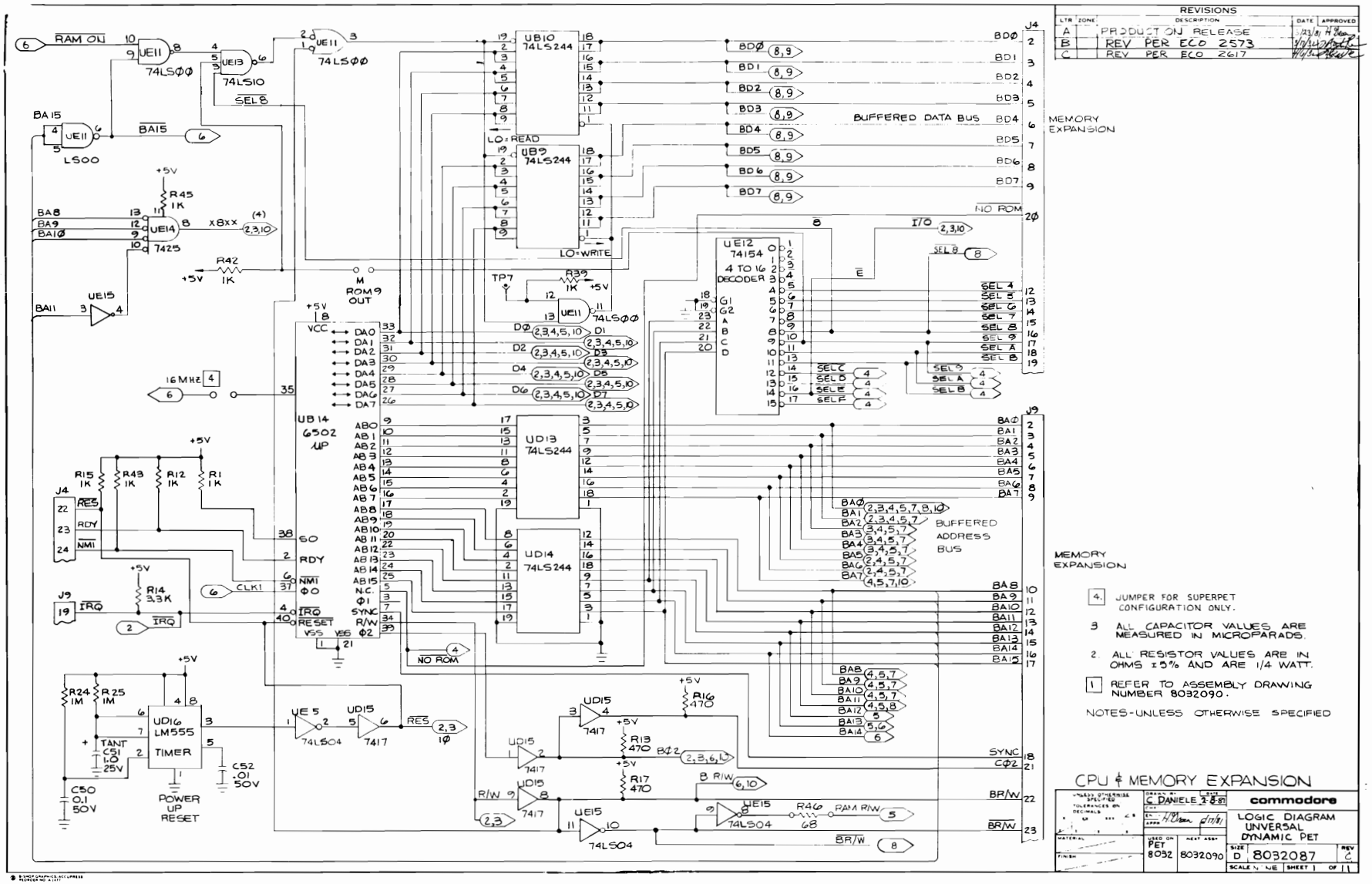
REVISIONS
LTR ZONE DESCRIPTION DATE APPROVED
A PRODUCTION RELEASE
B REV PER ECO 2573
C REV PER ECO 2617
RAM OU
UE11 74LSØØ
UE13 74LS10
SEL8
UE11 74LSØØ
BA15
UE11 LSØØ
BA15
+5V
R45 1K
BA8
BA9
BAIØ
UE14 7425
X8XX
(4)
2,3,10
R42 1K
+5V
UE15
BA11
M ROM9 OUT
UB10 74LS244
LO=READ
UB9 74LS244
LO=WRITE
TP7
R39 1K
+5V
UE11 74LSØØ
DØ
D2
D4
D6
2,3,4,5,10
D1
D3
D5
D7
BDØ
BD1
BD2
BD3
BD4
BD5
BD6
BD7
8,9
BUFFERED DATA BUS
J4
MEMORY EXPANSION
NO ROM
2Ø
I/O
2,3,10
SEL 8
8
UE12 74154 4 TO 16 DECODER
G1
G2
A
B
C
D
E
SEL 4
SEL 5
SEL 6
SEL 7
SEL 8
SEL 9
SEL A
SEL B
SEL C
SEL D
SEL E
SEL F
16MHZ
VCC
DA0
DA1
DA2
DA3
DA4
DA5
DA6
DA7
UB 14 6502 µP
AB0
AB1
AB2
AB3
AB4
AB5
AB6
AB7
AB8
AB9
AB10
AB11
AB12
AB13
AB14
AB15
N.C.
SYNC
R/W
Ø2
Ø1
Ø0
IRQ
RESET
VSS
RDY
NMI
CLK1
UD13 74LS244
UD14 74LS244
J9
BAØ
BA1
BA2
BA3
BA4
BA5
BA6
BA7
BA8
BA9
BA10
BA11
BA12
BA13
BA14
BA15
BUFFERED ADDRESS BUS
SYNC
CØ2
BR/W
MEMORY EXPANSION
4. JUMPER FOR SUPERPET CONFIGURATION ONLY.
3. ALL CAPACITOR VALUES ARE MEASURED IN MICROPARADS.
2. ALL RESISTOR VALUES ARE IN OHMS ±5% AND ARE 1/4 WATT.
1. REFER TO ASSEMBLY DRAWING NUMBER 8032090.
NOTES-UNLESS OTHERWISE SPECIFIED
R15 1K
R43 1K
R12 1K
R1 1K
J4
RES
RDY
NMI
R14 3.3K
J9
IRQ
R24 1M
R25 1M
UD16 LM555 TIMER
TANT C51 1.0 25V
C50 0.1 50V
C52 .01 50V
POWER UP RESET
UE 5 74LS04
UD15 7417
RES
2,3
1Ø
NO ROM
R16 470
R13 470
BØ2
2,3,6,10
R17 470
B R/W
6,10
R/W
2,3
UE15 74LS04
R46 68
RAM R/W
5
BR/W
8
CPU & MEMORY EXPANSION
UNLESS OTHERWISE SPECIFIED TOLERANCES ON DECIMALS
DRAWN BY C. DANIELE 2-8-81
commodore
LOGIC DIAGRAM UNIVERSAL DYNAMIC PET
MATERIAL
FINISH
USED ON PET 8032
NEXT ASSY 8032090
SIZE D 8032087 REV C
SCALE NONE SHEET 1 OF 1

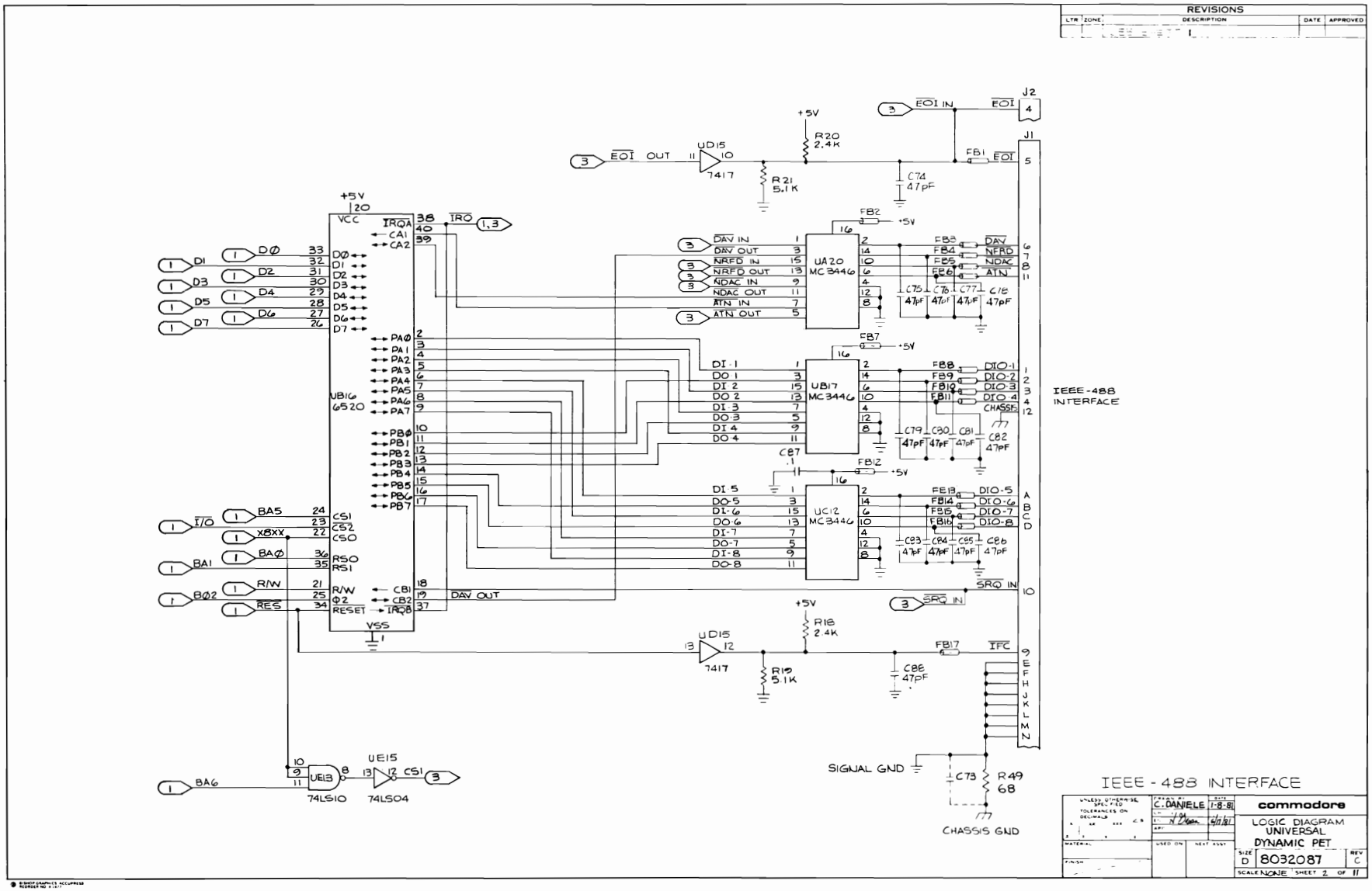
REVISIONS
LTR ZONE DESCRIPTION DATE APPROVED
IEEE-488 INTERFACE
UB16 6520
UA20 MC3446
UB17 MC3446
UC12 MC3446
UD15 7417
UE13 74LS10
UE15 74LS04
J1
J2
SIGNAL GND
CHASSIS GND
IEEE-488 INTERFACE
C. DANIELE 1-8-81
commodore
LOGIC DIAGRAM UNIVERSAL DYNAMIC PET
SIZE D 8032087 REV C
SCALE NONE SHEET 2 OF 11

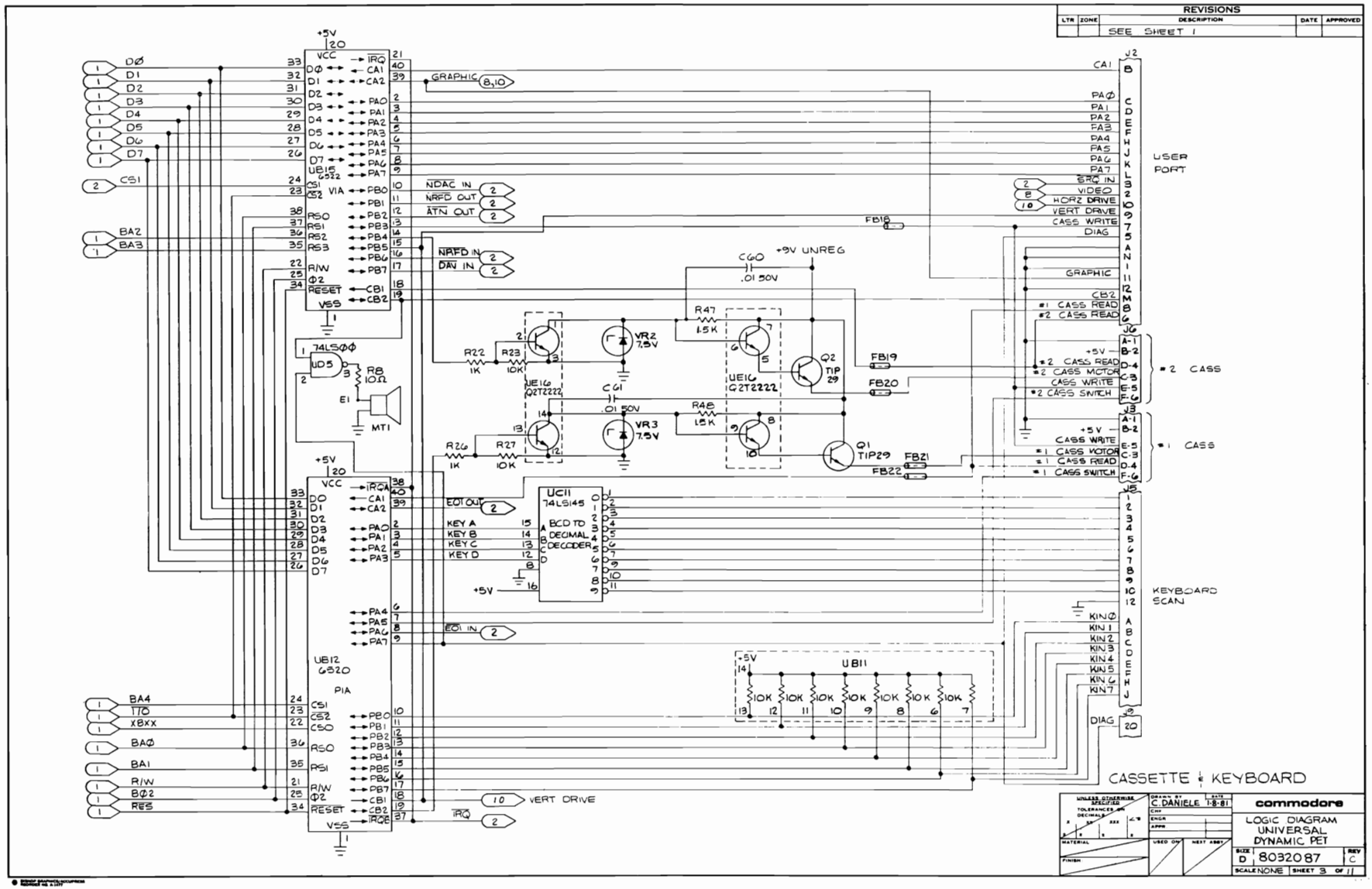
REVISIONS
LTR ZONE DESCRIPTION DATE APPROVED
SEE SHEET 1
UB15 6522 VIA
UB12 6520 PIA
UD5 74LS00
UE16 G2T2222
UC11 74LS145 BCD TO DECIMAL DECODER
UB11
USER PORT
KEYBOARD SCAN
CASS #2
CASS #1
CASSETTE & KEYBOARD
commodore
LOGIC DIAGRAM UNIVERSAL DYNAMIC PET
C. DANIELE 1-8-81
SIZE D 803287 REV C
SCALE NONE SHEET 3 OF 11

REVISIONS				
LTR	ZONE	DESCRIPTION	DATE	APPROVED
		SEE SHEET 1		

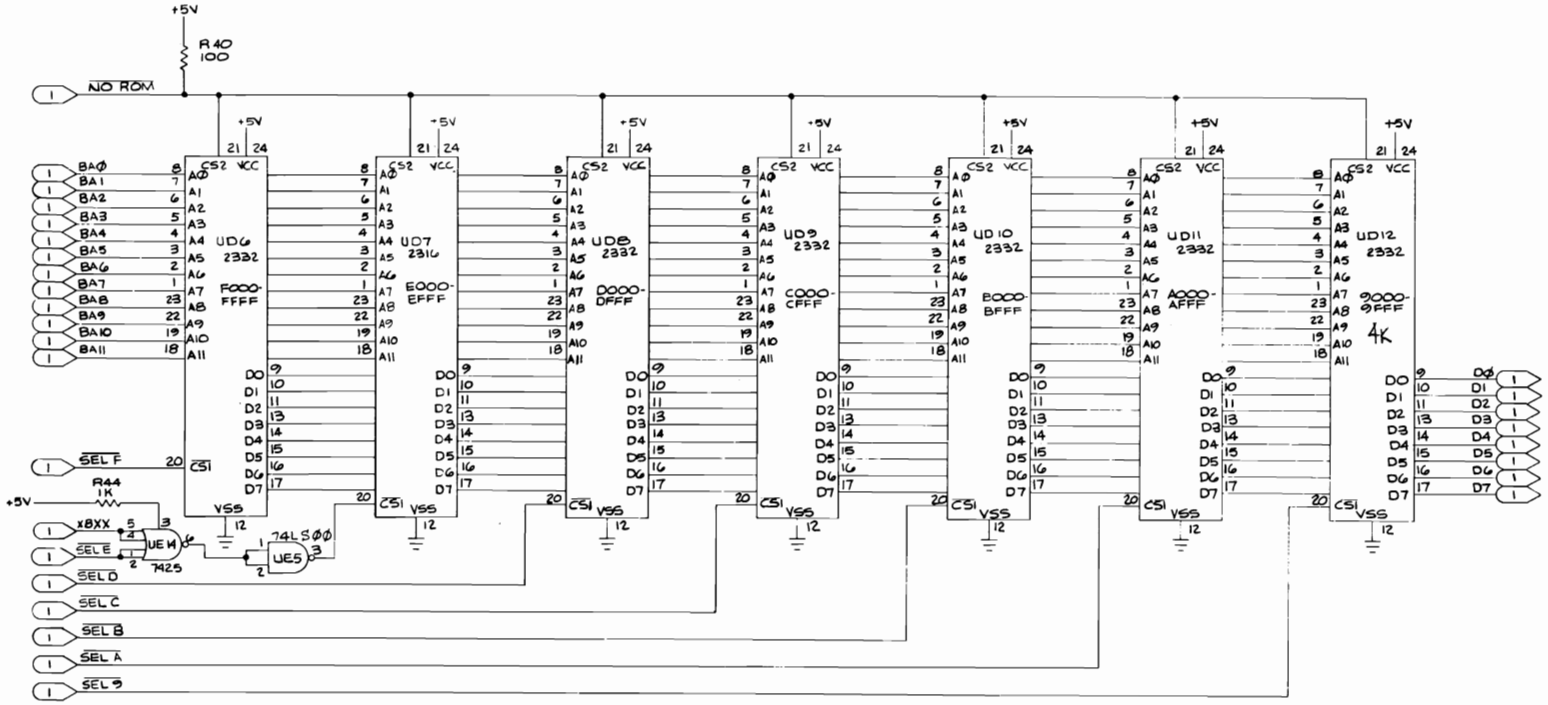

ROMS

UNLESS OTHERWISE SPECIFIED TOLERANCES ON DECIMALS	DRAWN BY C. DANIELE DATE 1-8-81	commodore	
MATERIAL	USED ON	NEXT ASSY	LOGIC DIAGRAM UNIVERSAL DYNAMIC PET
FINISH			SIZE D 8032087 REV C
			SCALE NONE SHEET 4 OF 11

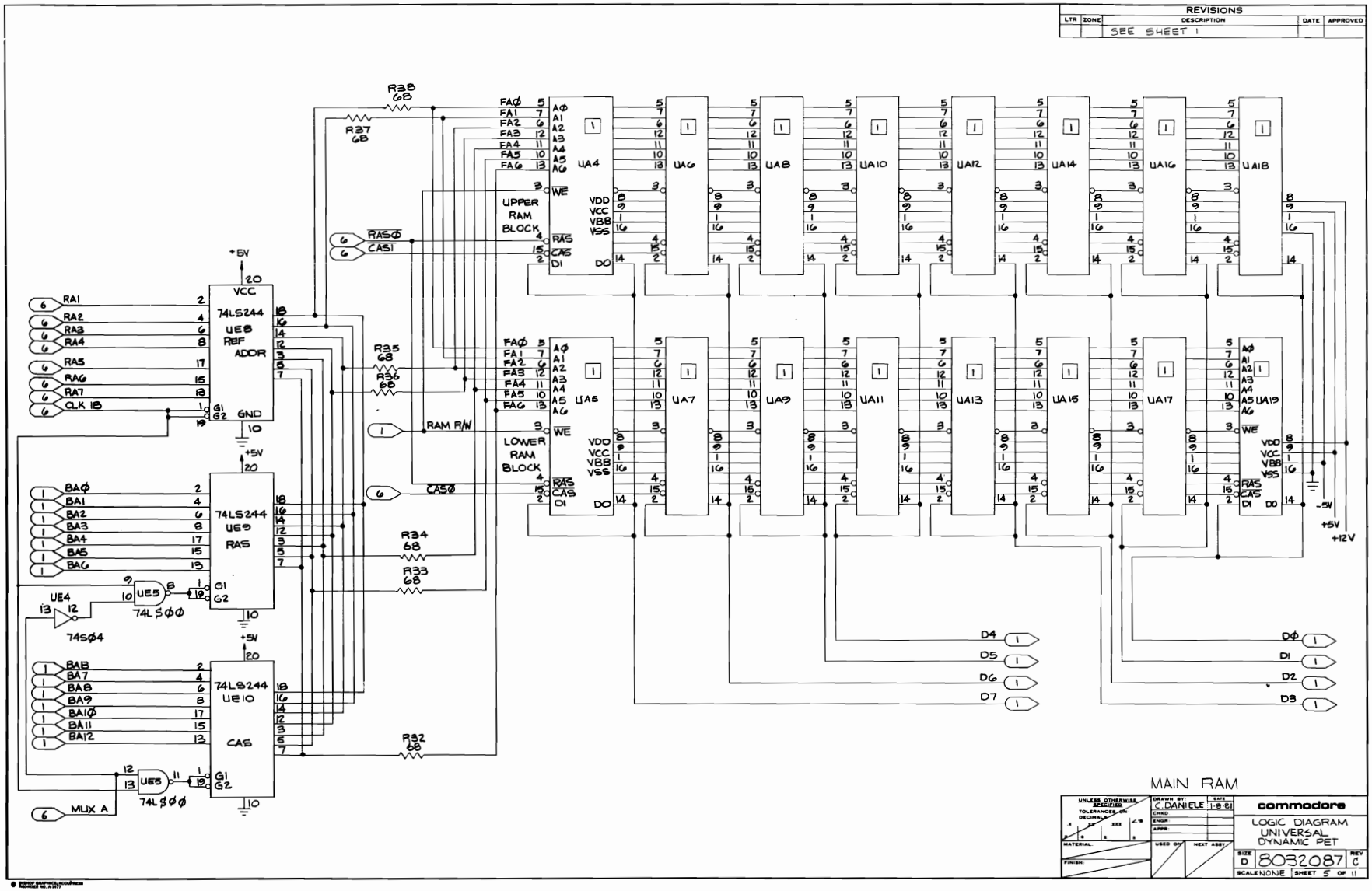
REVISIONS
LTR ZONE DESCRIPTION DATE APPROVED
SEE SHEET 1
R38 68
R37 68
R35 68
R36 68
R34 68
R33 68
R32 68
RAS0
CAS1
RAM R/W
CAS0
MUX A
+5V
VCC
74LS244
UE8
REF ADDR
RA1
RA2
RA3
RA4
RA5
RA6
RA7
CLK 1B
G1
G2
GND
UE9
RAS
BA0
BA1
BA2
BA3
BA4
BA5
BA6
UE4
74S04
UE5
74LS00
UE10
CAS
BA8
BA7
BA9
BA10
BA11
BA12
UA4
UA5
UA6
UA7
UA8
UA9
UA10
UA11
UA12
UA13
UA14
UA15
UA16
UA17
UA18
UA19
UPPER RAM BLOCK
LOWER RAM BLOCK
FA0
FA1
FA2
FA3
FA4
FA5
FA6
A0
A1
A2
A3
A4
A5
A6
WE
VDD
VCC
VBB
VSS
RAS
CAS
DI
DO
D4
D5
D6
D7
D0
D1
D2
D3
-5V
+5V
+12V
MAIN RAM
UNLESS OTHERWISE SPECIFIED
TOLERANCES ON DECIMALS
DRAWN BY C. DANIELE
DATE 1-9-81
CHKD
ENGR
APPR
MATERIAL
FINISH
USED ON
NEXT ASSY
commodore
LOGIC DIAGRAM
UNIVERSAL
DYNAMIC PET
SIZE D
8032087
REV C
SCALE NONE
SHEET 5 OF 11

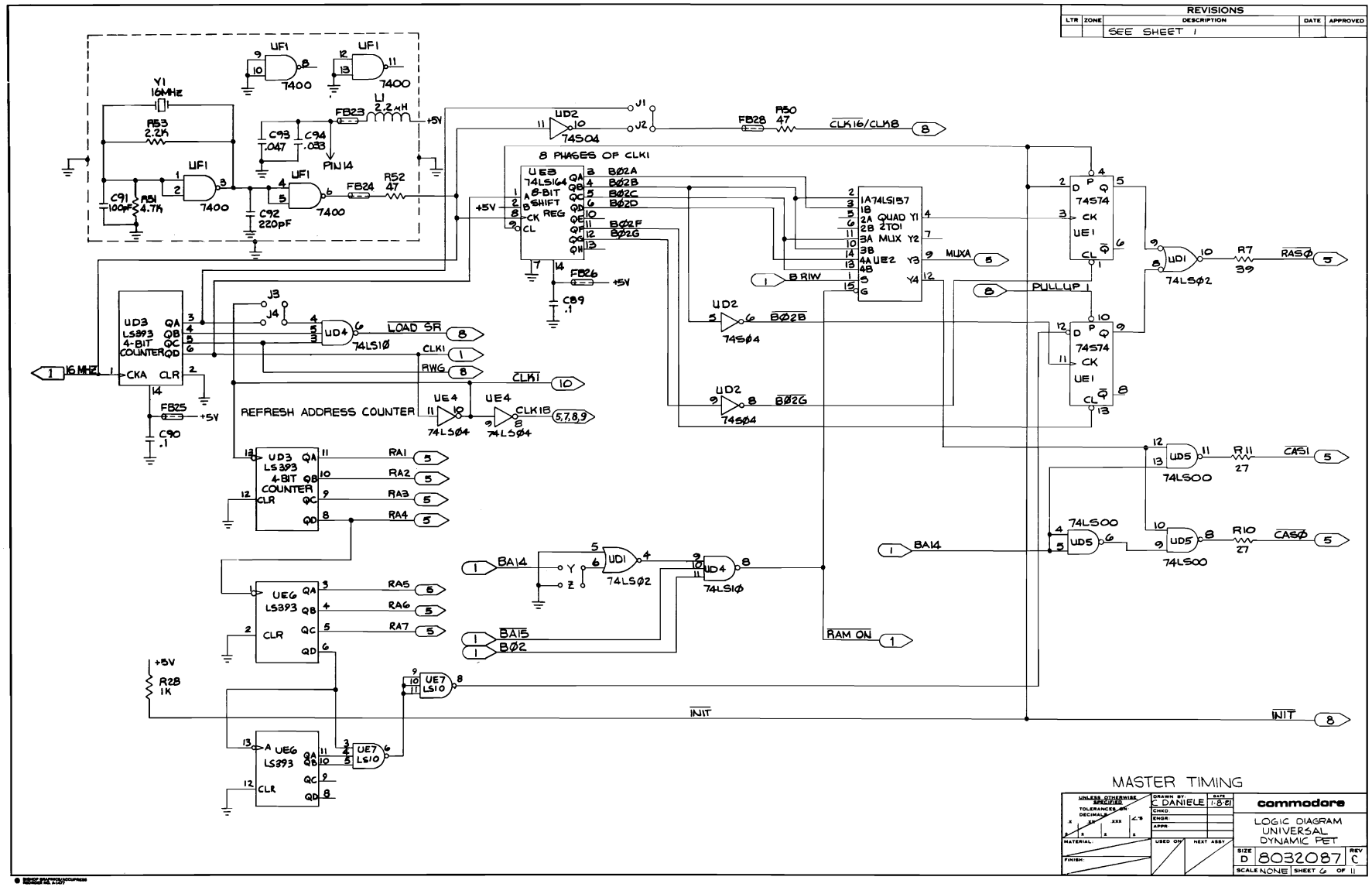
REVISIONS
LTR ZONE DESCRIPTION DATE APPROVED
SEE SHEET 1
8 PHASES OF CLK1
REFRESH ADDRESS COUNTER
MASTER TIMING
commodore
LOGIC DIAGRAM
UNIVERSAL
DYNAMIC PET
D 8032087 C
SCALE NONE SHEET 6 OF 11

REVISIONS				
LTR	ZONE	DESCRIPTION	DATE	APPROVED
		SEE SHEET 1		

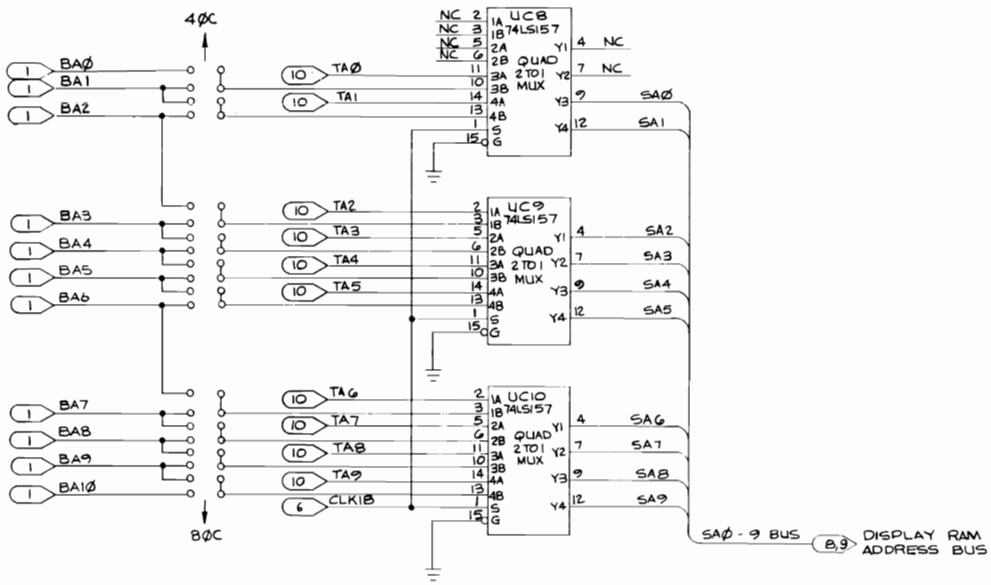

DISPLAY ADDRESS MUX

UNLESS OTHERWISE SPECIFIED TOLERANCES ON DECIMALS	DRAWN BY: C. DANIELE	DATE 1-8-81	commodore
	CHKD		LOGIC DIAGRAM UNIVERSAL DYNAMIC PET
	ENGR		
	APPR		
MATERIAL	USED ON	NEXT ASSY	
FINISH			SIZE D 8032087 REV 2
			SCALE NONE SHEET 7 OF 11

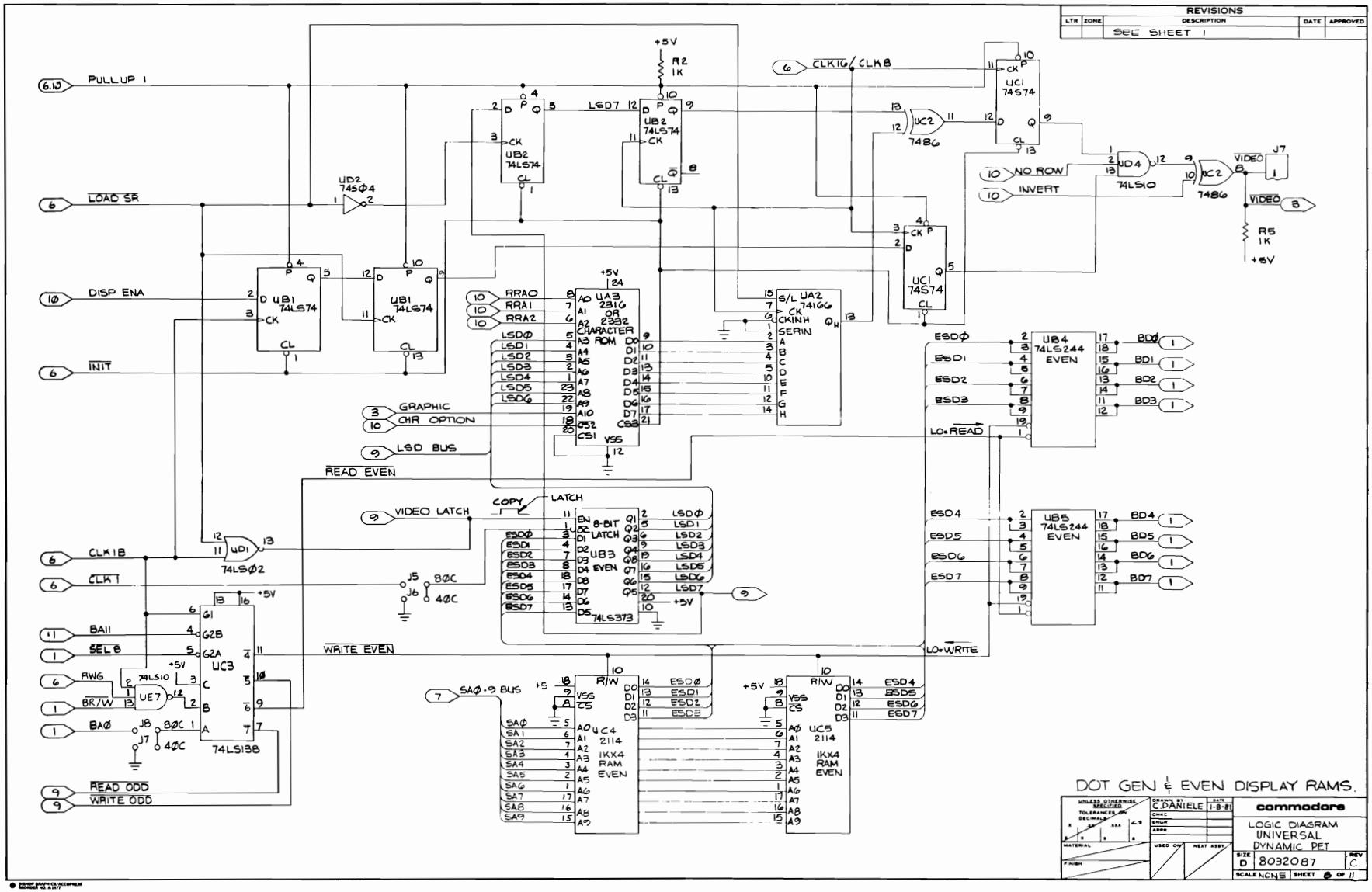
REVISIONS
LTR ZONE DESCRIPTION DATE APPROVED
SEE SHEET 1
PULLUP 1
LOAD SR
DISP ENA
INIT
CLK1B
CLK1
BA11
SELB
RWG
BR/W
BAØ
READ ODD
WRITE ODD
UD2 74SØ4
UB1 74LS74
UD1 74LSØ2
UC3 74LS138
UE7 74LS10
J5 8ØC
J6 4ØC
J8 8ØC
J7 4ØC
R2 1K
UB2 74LS74
LSD7
CLK1G/CLK8
UC1 74S74
UC2 7486
UD4 74LS10
NO ROW
INVERT
VIDEO
J7
R5 1K
UA3 2316 OR 2332 CHARACTER ROM
RRAØ
RRA1
RRA2
GRAPHIC
CHR OPTION
LSD BUS
READ EVEN
UA2 74166
UB3 8-BIT LATCH EVEN 74LS373
VIDEO LATCH
COPY
LATCH
UB4 74LS244 EVEN
UB5 74LS244 EVEN
LO=READ
LO=WRITE
WRITE EVEN
SAØ-9 BUS
UC4 2114 1KX4 RAM EVEN
UC5 2114 1KX4 RAM EVEN
DOT GEN & EVEN DISPLAY RAMS.
UNLESS OTHERWISE SPECIFIED TOLERANCES ON DECIMALS
DRAWN BY C DANIELE DATE 1-8-81
CHKD
ENGR
APPR
MATERIAL
FINISH
USED ON
NEXT ASSY
commodore
LOGIC DIAGRAM UNIVERSAL DYNAMIC PET
SIZE D 8032087 REV C
SCALE NONE SHEET 8 OF 11

REVISIONS				
LTR	ZONE	DESCRIPTION	DATE	APPROVED
		SEE SHEET 1		

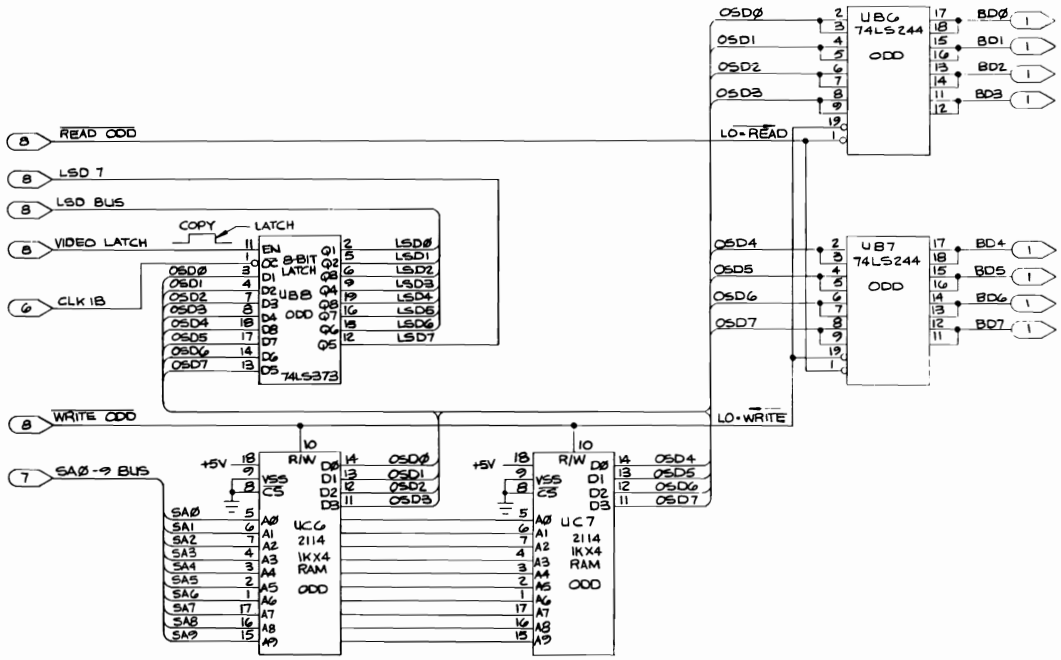

ODD DISPLAY RAMS

UNLESS OTHERWISE SPECIFIED TOLERANCES ON DECIMALS .X ±.5 .XX ±.25 .XXX ±.8 ∠ ±5°	DRAWN BY C. DANIELE	DATE 1-8-81	commodore
	CHK		LOGIC DIAGRAM UNIVERSAL DYNAMIC PET
	ENGR		
	APPR		
MATERIAL	USED ON	NEXT ASSY	SIZE D 8032087 REV C
FINISH			SCALE NONE SHEET 9 OF 11

REVISIONS				
LTR	ZONE	DESCRIPTION	DATE	APPROVED
		SEE SHEET 1		

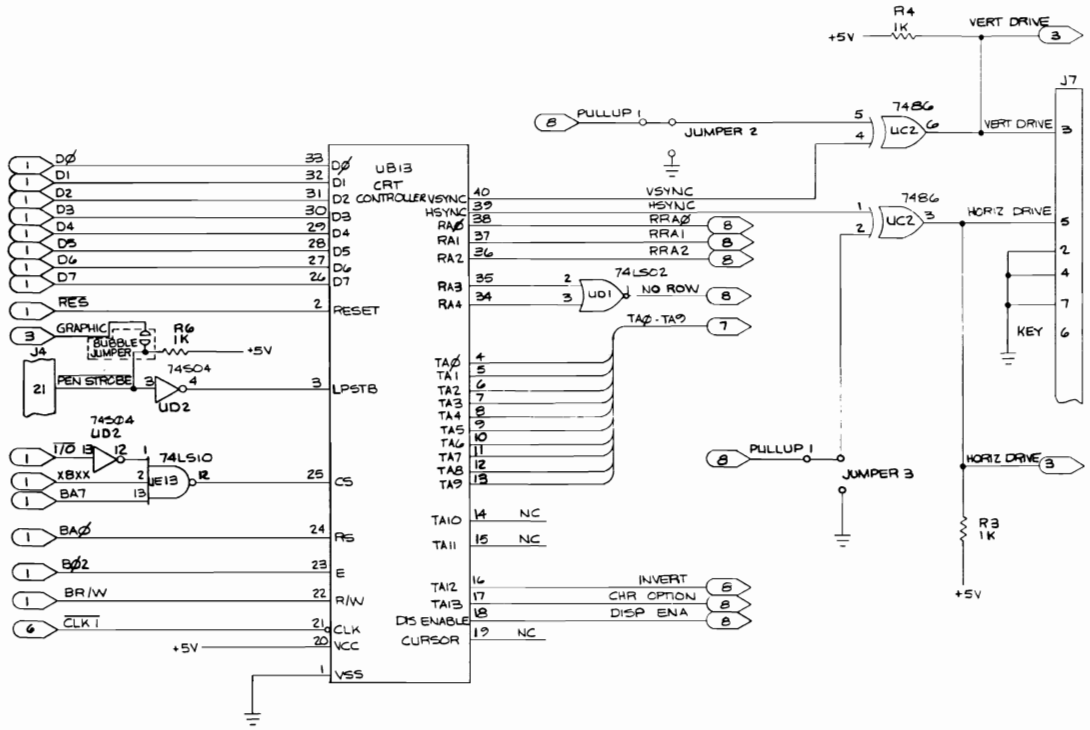

CRTC AND SYNC BUFFERS

UNLESS OTHERWISE SPECIFIED TOLERANCES ON DECIMALS .X ±.1 .XX ±.05 .XXX ±.010 ∠ ±1°	DRAWN BY C. DANIELE	DATE 1-8-81	commodore
MATERIAL	CHKD		LOGIC DIAGRAM UNIVERSAL DYNAMIC PET
FINISH	ENGR		
	APPR		
	USED ON	NEXT ASSY	SIZE D 8032087 REV C
			SCALE NONE SHEET 10 OF 11

REVISIONS				
LTR	ZONE	DESCRIPTION	DATE	APPROVED
		SEE SHEET 1		

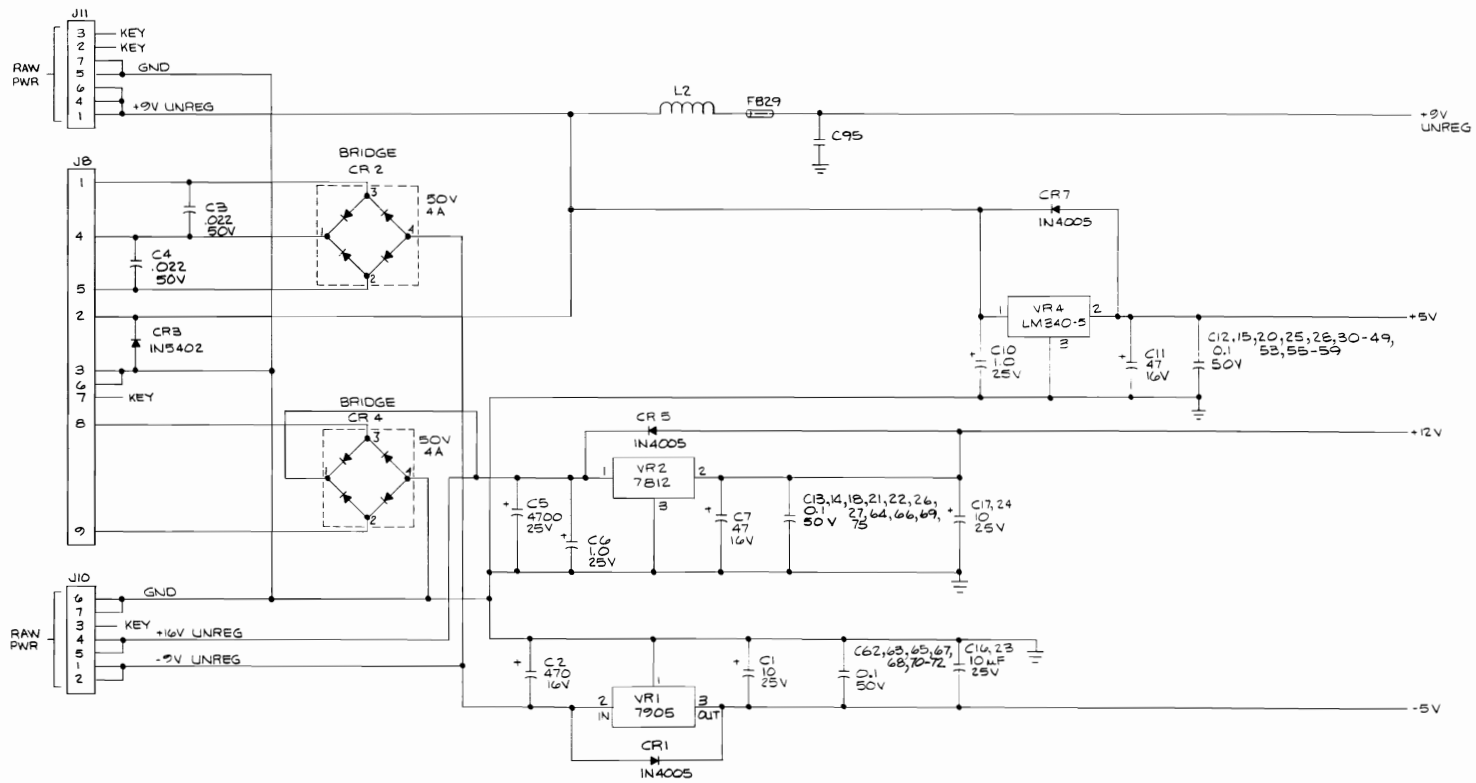

VOLTAGE REGULATOR

UNLESS OTHERWISE SPECIFIED TOLERANCES-ON DECIMALS .X ±.1 .XX ±.03 .XXX ±.010 ∠ ±1°	DRAWN BY C. DANIELE	DATE 2-9-81	commodore
	CHKD		LOGIC DIAGRAM UNIVERSAL DYNAMIC PET
	ENGR		
	APPR		
MATERIAL	USED ON	NEXT ASSY	SIZE D 8032087 REV C
FINISH			SCALE NONE SHEET 11 OF 11

© Commodore Business Machines Corporation 1981 Form No. A1377

PART NO.	DESCRIPTION
8032080-01	UNIV. DYNAMIC PET 8032-60Hz
-03	4032-60Hz
-05	4016-60Hz
-07	9000-60Hz

REVISIONS

LTR	ZONE	DESCRIPTION	DATE	APPROVED
A		PRODUCTION RELEASE	3/5/81	C.t.h.
B		REVISED PER ECO 2062	4/9/81	
C		REVISED PER ECO 2066	4/9/81	
D		REVISED PER ECO 2068	4/13/81	
E		REVISED PER ECO 2087	7/24/81	
F		REV PER ECO 2564 & 2556	3/9/82	
G		REV PER ECO 2596	4/16/82	
H		REV PER ECO 2700	5/6/82	
J		REVISED PER ECO 2720	6/8/82	

[10] IDENTIFY WITH APPLICABLE DASH NO.

[9] COMPONENT SIDE: SOLDER JUMPER WIRE TO IC PIN 21 UB13 TO PIN 8 OF UE6. SOLDER JUMPER WIRE TO IC PIN 3 UB1 TO PIN 6 OF UC3.

[8] COMPONENT SIDE: CUT PIN 21 OF UB 13
CUT PIN 3 OF UB1

[7] SOLDER SIDE: BRIDGE SHORT PINS 10 & 11 OF UD2 PRIOR TO SOLDER WAVE.
COMPONENT SIDE: CUT PINS 10 & 11 OF UD2

[6] SOLDER TO XTAL AND PCB.

[5] FOR ITEMS 116 AND 117 ALL ASSEMBLIES MUST HAVE SAME VENDOR.

[4] SOLDER JUMPER, ITEM 107 FROM E1 TO SILVER CONTACT ON MT 1, ITEM 69; TAKE CARE TO ALLOW NO MORE THAN ONE SECOND DURATION FOR APPLICATION OF HEAT DURING SOLDERING.

[14] CUT TRACE FROM UC3/3 TO +5 ON COMP. SIDE: INSTALL JUMPER FROM UC3/3 TO UD3/2 ON SOLDER SIDE.

[13] FOR SUBSTITUTE PART SEE PART SUBSTITUTION INDEX, PART NO. 321233.

[12] REWORK INSTRUCTIONS FOR -07 & -08. JUMPER WIRE FROM UE5 PIN 6 TO UB14 PIN 35. USE 22 AWG.

[11] ADD JUMPER FROM CATHODE OF VR5 TO NEAREST LEAD OF R47.

[3] SOLDER AT 3 PLACES, EQUALLY SPACED AROUND THE BRASS BASE MT (ITEM 69).

[2] IDENTIFY WITH COMMODORE PART NO.

1. SHEET 6 OF 7 SIZE C, SHEET 7 OF 7 SIZE D.

NOTES: UNLESS OTHERWISE SPECIFIED:

commodore	TITLE: PCB ASSY, UNIV. DYNAMIC PET	DRAWN BY: M. AMES	DATE 1-30-81	ENGR:	3/5/81	SIZE B	DRAWING NUMBER 8032080
		CHKD:	2/13/81	APPR:			SHEET 1 OF 7

QUANTITY REQD PER PART / DASH NO. 08	07	06	05	03	01	ITEM	DS	PART NUMBER	DESCRIPTION	REF DES	BEND	NOTES
1	1	1	1	1	1	1	D	8032079	PCB FAB, UNIV. DYNAMIC PET			
REF	REF	REF	REF	REF	REF	2	D	8032081	LOGIC DIAGRAM, UNIV. DYNAMIC PET			
						3						
1	1	1	1	1	1	4	B	901435-01	IC, 6502	UB14		
2	2	2	2	2	2	5	B	901436-01	,6520	UB16,UB12		
1	1	1	1	1	1	6	B	901437-01	,6522	UB15		
1	1	1	1	1	1	7	B	901479-01	,CRT CONTROLLER	UB13		
3	3	3	3	3	3	8	B	901521-01	,74LS00	UD5,UE5,UE11		
1	1	1	1	1	1	9	B	901521-32	,74LS86	UC2		SEE NOTE 13
1	1	1	1	1	1	10	B	901521-21	,74LS02	UD1		
1	1	1	1	1	1	11	B	901521-02	,74LS04	UE15		
2	2	2	2	2	2	12	B	901525-01	,74S04	UD2,UE4		
2	2	2	2	2	2	13	B	901521-24	,74LS10	UD4,UE13		
1	1	1	1	1	1	14	B	901522-01	,7417	UD15		
1	1	1	1	1	1	15	B	901522-20	,7425	UE14		
4	4	4	4	4	4	16	B	901521-11	,74LS157	UC8-UC10,UE2		SEE NOTE 13
1	1	1	1	1	1	17	B	901521-16	,74LS138	UC3		
2	2	2	2	2	2	18	B	901521-06	,74LS74	UB1,UB2		
2	2	2	2	2	2	19	B	901525-09	,74S74	UC1,UE1		
						20						
1	1	1	1	1	1	21	B	901521-09	,74LS145	UC11		
1	1	1	1	1	1	22	B	901522-13	,74154	UE12		
						23						
1	1	1	1	1	1	24	B	901521-28	,74LS164	UE3		SEE NOTE 13
3	3	3	3	3	3	25	B	901522-03	,74177	UD3,UE6,UE7		
						26						
1	1	1	1	1	1	27	B	901522-28	,74166	UA2		
1	1	1	1	1	1	28	B	901465-22	,2332	UD6		
1	1	1	1	1	1	29	B	901465-21	,2332	UD8		
1	1	1	1	1	1	30	B	901465-20	,2332	UD9		
1	1	1	1	1	1	31	B	901465-23	,2332	UD10		
1	1	1	1	1	1	32	B	901447-10	,2316	UA3		
1	1	1	1	1	1	33	B	901523-01	,LM555	UD16		
3	3	3	3	3	3	34	B	901524-01	IC ,MC3446	UA20,UB17,UC12		
						35						
1	1	1	1	1	1	36	B	900462-21	CAP, CERAMIC AXIAL 22pF 50V	C54		SEE NOTE 13
3	3	3	3	3	3	37	B	900461-16	CAP, CERAMIC AXIAL .01μF 50V	C52,60,61		

commodore	TITLE: PCB ASSY, UNIV. DYNAMIC PET	DRWN BY: M-AMES	DATE 1-30-81	ENGR:	DATE	SIZE B	8032080	REV J	SHT 2/7
		CHKD:		APPR:					

QUANTITY REQD PER PART/DASH NO. 08	07	06	05	04	03	02	01	ITEM	DS	PART NUMBER	DESCRIPTION	REF DES	BEND	NOTES
2	2	2	2	2	2	2	2	38	B	900461-20	CAP, CERAMIC AXIAL .022µF 50V	C3,4		
53	53	53	53	53	53	53	53	39	B	900461-28	,CERAMIC AXIAL .1µF 50V	C12-15,18-22,25-50,53,55-59,62-72		
5	5	5	5	5	5	5	5	40	B	900109-03	,LOW LEAK. ELECT. 10µF 25V	C1,16,17,23,24		SEE NOTE 13
4	4	4	4	4	4	4	4	41	B	900110-07	,LOW LEAK. ELECT. 1µF 50V	C6,8,10,51		SEE NOTE 13
								42						
								43						
1	1	1	1	1	1	1	1	44	B	900100-44	,ELECTROLYTIC 470µF 16V	C2		
1	1	1	1	1	1	1	1	45	B	900100-45	,ELECTROLYTIC 4700µF 25V	C5		
3	3	3	3	3	3	3	3	46	B	900101-37	CAP, ELECTROLYTIC 47µF 16V	C7,9,11		
								47						
								48						
								49						
17	17	17	17	17	17	17	17	50	B	901550-01	RES, CARBON 1/4W ±5% 1K	R1-6,12,15,22,26,28,31,39,42-45		
1	1	1	1	1	1	1	1	51	B	901550-02	3.3K	R14		
2	2	2	2	2	2	2	2	52	B	901550-03	5.1K	R19,21		
2	2	2	2	2	2	2	2	53	B	901550-20	10K	R23,27		
1	1	1	1	1	1	1	1	54	B	901550-49	100Ω	R40		
5	5	5	5	5	5	5	5	55	B	901550-58	470Ω	R13,16,17,29,30		
1	1	1	1	1	1	1	1	56	B	901550-64	10Ω	R8		
2	2	2	2	2	2	2	2	57	B	901550-69	1.5K	R47,48		
2	2	2	2	2	2	2	2	58	B	901550-84	1M	R24,25		
2	2	2	2	2	2	2	2	59	B	901550-85	2.4K	R18,20		
2	2	2	2	2	2	2	2	60	B	901550-90	27Ω	R10,11		
1	1	1	1	1	1	1	1	61	B	901550-93	39Ω	R7		
9	9	9	9	9	9	9	9	62	B	901550-94	RES, CARBON 1/4W ±5% 68Ω	R32-38,46,49		
								63						
1	1	1	1	1	1	1	1	64	B	902419-66	RES NETWORK, DIP 14PIN 10K	UB11		
								65						
2	2	2	2	2	2	2	2	66	B	902653-01	TRANSISTOR, NPN TIP 29	Q1,2		
1	1	1	1	1	1	1	1	67	B	902550-01	TRANSISTOR PACK Q2T2222	UE16		
								68						
1	1	1	1	1	1	1	1	69	B	907300-02	TRANSDUCER-PIEZO ACOUSTIC	MT1		
								70						
2	2	2	2	2	2	2	2	71	B	900941-01	DIODE, ZENER 7.5V	VR5,6		
4	4	4	4	4	4	4	4	72	B	900750-01	DIODE, 1N4001	CR1,5-7		
1	1	1	1	1	1	1	1	73	B	900753-01	DIODE, 1N5402 3A/200V	CR3		
2	2	2	2	2	2	2	2	74	B	900757-01	DIODE, BRIDGE 4A/50V	CR2,4		SEE NOTE 13

commodore	TITLE: PCB ASSY, UNIV. DYNAMIC PET	DRWN BY: M. AMES	DATE 1-30-81	ENGR:	DATE	SIZE B	8032080	REV J	SHT 3/7
		CHKD:		APPR:					

08	07	06	05	04	03	02	01	ITEM	BS	PART NUMBER	DESCRIPTION	REF DES	BEND	NOTES
								75						
								76						
								77						
1	1	1	1	1	1	1	1	78	B	901527-03	VOLTAGE REGULATOR, 7905, -5V/1.5A	VR1		TO-220
2	2	2	2	2	2	2	2	79	B	901528-03	VOLTAGE REGULATOR, LM340-5, +5V/1.5A	VR3,4		TO-3; SEE NOTE 13
1	1	1	1	1	1	1	1	80	B	901528-04	VOLTAGE REGULATOR, 7812, +12V/1A	VR2		TO-3
								81						
								82						
								83						
1	1	1	1	1	1	1	1	84	B	900556-02	CRYSTAL 16MHz	Y1		
								85						
								86						
2	2	—	—	—	—	—	—	87	B	904150-04	SOCKET IC LOW PROFILE -24 PIN	UA3, UD7		
—	—	4	4	4	4	4	4	88	B	904150-04	SOCKET, IC LOW PROFILE 24 PIN	UA3, UD7, UD11, UD12		
1	1	1	1	1	1	1	1	89	B	904150-06	SOCKET, IC LOW PROFILE 40 PIN	UB14		
								90						
1	1	1	1	1	1	1	1	91	B	903326-07	HEADER ASSY .100 CENTER	J10		7 PIN; REMOVE PIN 3 AT ASSEMBLY
2	2	2	2	2	2	2	2	92	B	903345-25	HEADER ASSY, DUAL ROW .100 CENTER	J4, 9		50 PIN
1	1	1	1	1	1	1	1	93	B	903316-09	HEADER ASSY .156 CENTER	J8		9 PIN; REMOVE PIN 7 AT ASSEMBLY
1	1	1	1	1	1	1	1	94	B	903331-07	HEADER ASSY, POLARIZED .100 CENTER	J11		7 PIN; REMOVE PIN 3 AT ASSEMBLY
1	1	1	1	1	1	1	1	95	B	903331-07	HEADER ASSY, POLARIZED .100 CENTER	J7		7 PIN; ORIENT OMITTED PIN TO PIN 6 POSITION
1	1	1	1	1	1	1	1	96	B	903331-20	HEADER ASSY, POLARIZED .100 CENTER	J5		20 PIN; ORIENT OMITTED PIN TO PIN 19 POSITION
								97						
1	1	1	1	1	1	1	1	98	B	320268-01	HEAT SINK			
A/R	A/R	A/R	A/R	A/R	A/R	A/R	A/R	99	B	904907-01	HEAT SINK, COMPOUND THERMAL			
								100						
6	6	6	6	6	6	6	6	101	B	906403-19	RIVET, DOME HEAD, OPEN END			
2	2	2	2	2	2	2	2	102	B	906404-04	RIVET, DOME HEAD, CLOSED END			
								103						
20	20	20	20	20	20	20	20	104	B	903781-01	22 AWG BARE WIRE ON TAPE & REEL			
								105						
A/R	A/R	—	—	—	—	—	—	106	B	903755-03	WIRE, INSULATED, #22 AWG			
1	1	1	1	1	1	1	1	107	B	903780-01	#30 WIRE WRAP WIRE, RED			
1	1	1	1	1	1	1	1	108	B	320086-02	BUS WIRE			
								109						
11	11	/	/	/	/	11	11	110	B	901521-13	IC, 74LS244	UB4-UB7, UB9, UB10, UD13, UD14, UE8, UE9, UE10		
/	/	9	9	9	9	/	/	111	B	901521-13	IC, 74LS244	UB4, UB5, UB9, UB10, UD13, UD14, UE8, UE9, UE10		

commodore

TITLE: PCB ASSY, UNIV. DYNAMIC PET

DRAWN BY: M. AMES DATE 1-30-81

CHKD: [signature]

ENGR: DATE

APPR:

SIZE B 8032080 REV J SHT 4/7

QUANTITY REQD PER PART / DASH NO.								ITEM	DS	PART NUMBER	DESCRIPTION	REF DES	BEND	NOTES
08	07	06	05	04	03	02	01							
2	2					2	2	112	B	901521-29	IC, 74LS373	UB3, UB8		
		1	1	1	1			113	B	901521-29	,74LS373	UB3		
4	4					4	4	114	B	901453-02	,2114	UC4-UC7		
		2	2	2	2			115	B	901453-02	,2114	UC4, UC5		
16	16			16	16	16	16	116	B	901470-01	,4116	UA4-UA19		
		8	8					117	B	901470-01	,4116	UA5, UA7, UA9, UA11, UA13, UA15, UA17, UA19		
	1						1	118	B	901474-03	,2316	UD7		
1						1		119	B	901474-04	,2316	UD7		
			1		1			120	B	901499-01	,2316	UD7		
		1		1				121	B	901498-01	IC, 2316	UD7		
								122						
								123						
								124						
								125						
								126						
								127						
								128						
								129						
								130						
								131						
								132						
								133						
								134						
								135						
								136						
								137						
								138						
								139						
								140						
								141						
								142						
								143						
								144						
								145						
								146						
								147						
								148						

commodore

TITLE: PCB ASSY, UNIV. DYNAMIC PET

DRWN BY: M. AMES — DATE: 1-30-81
CHKD: — DATE: 3/3/81
ENGR: — DATE:
APPR:

SIZE: B — 8032080 — REV: J — SHT: 5/7

REVISIONS				
LTR	ZONE	DESCRIPTION	DATE	APPROVED
		SEE SHEET 1		

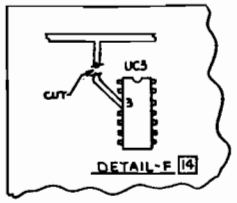

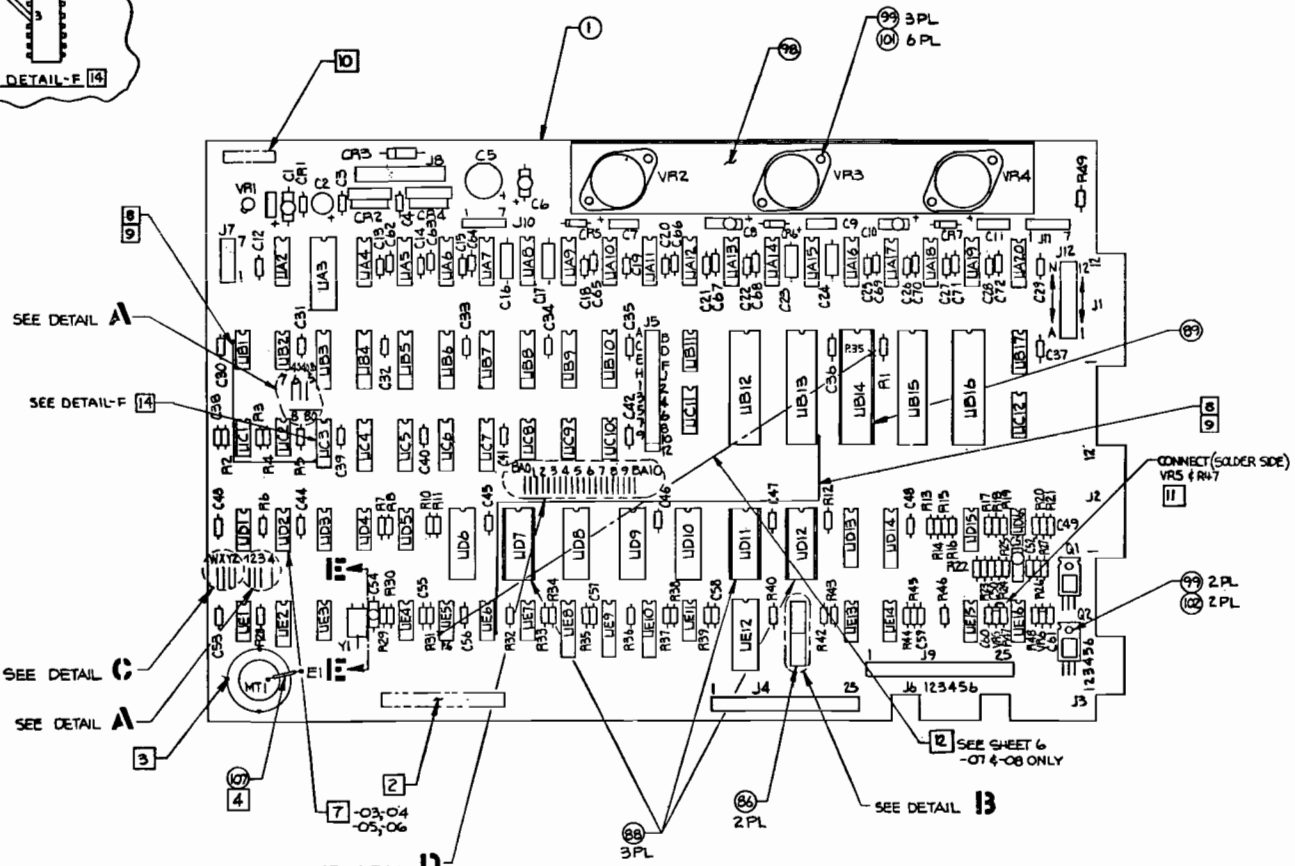

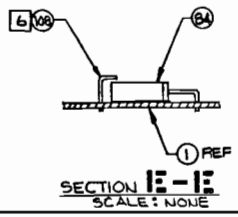

SECTION E-E
SCALE: NONE

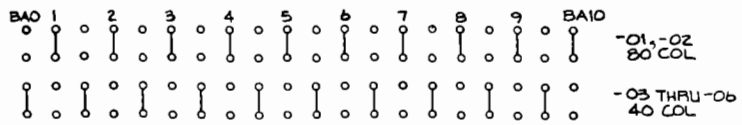

DETAIL D
SCALE: NONE
JUMPER CONFIGURATIONS (104)

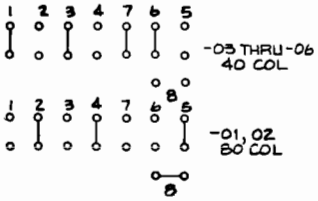

DETAIL A
SCALE: NONE
JUMPER CONFIGURATIONS (104)

DETAIL B
SCALE: NONE
JUMPER CONFIGURATIONS (104)

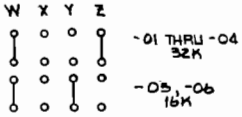

DETAIL C
SCALE: NONE
JUMPER CONFIGURATIONS (104)

-01 THRU -08 SHOWN

UNLESS OTHERWISE SPECIFIED TOLERANCES ON DECIMALS	DRAWN BY M. AYES	DATE 1-14-81	commodore
	CHKD		PCB ASSY- UNIV. DYNAMIC PET
	ENGR		
	APPR		
MATERIAL	USED ON	NEXT ASSY	SIZE D 8032080 REV J
FINISH			SCALE 1/1 SHEET 7 OF 7

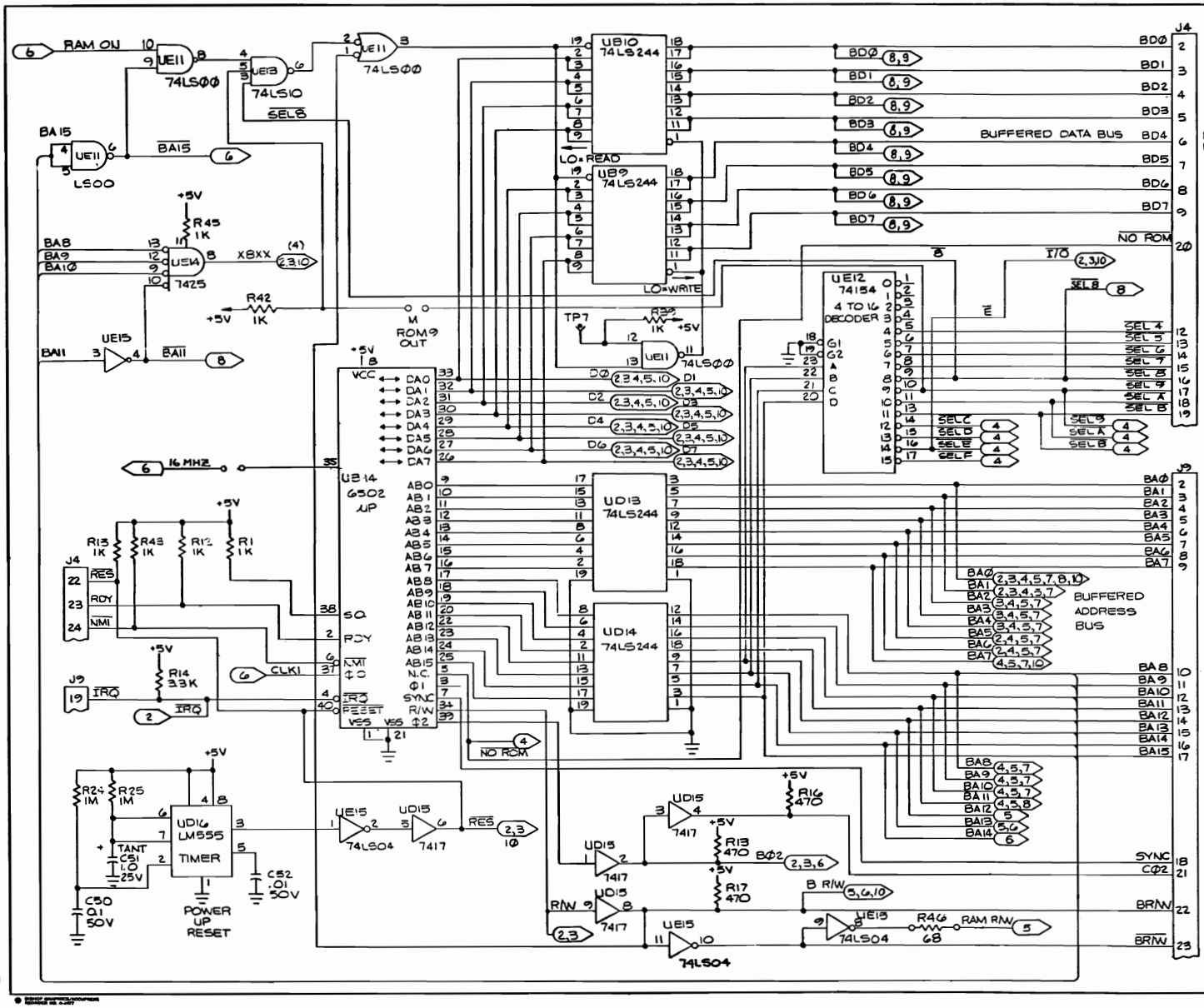

REVISIONS				
LTR	ZONE	DESCRIPTION	DATE	APPROVED
A		PRODUCTION RELEASE		
B		REVISED PER ECO 2091		
C		REV PER ECO 2574		
D		REVISED PER ECO 2607		
E		REV PER ECO 2596		

3. ALL CAPACITOR VALUES ARE MEASURED IN MICROFARADS.
2. ALL RESISTOR VALUES ARE IN OHMS ±5% AND ARE 1/4 WATT.
1. REFER TO ASSEMBLY DRAWING NUMBER 8032030.

NOTES UNLESS OTHERWISE SPECIFIED:

CPU & MEMORY EXPANSION

UNLESS OTHERWISE SPECIFIED TOLERANCES ON DECIMALS .X ±.1 .XX ±.05 .XXX ±.010 ∠ ±0°

MATERIAL:

FINISH:

DRAWN BY: C. DANIELS DATE 1-8-81

CHKD:

ENGR:

APPR:

USED ON: PET 8032 | NEXT ASSY: 8032080

commodore

LOGIC DIAGRAM UNIVERSAL DYNAMIC PET

SIZE D | 8032081 | REV E

SCALE NONE | SHEET 1 OF 11

REVISIONS				
LTR	ZONE	DESCRIPTION	DATE	APPROVED
—		SEE SHEET 1		

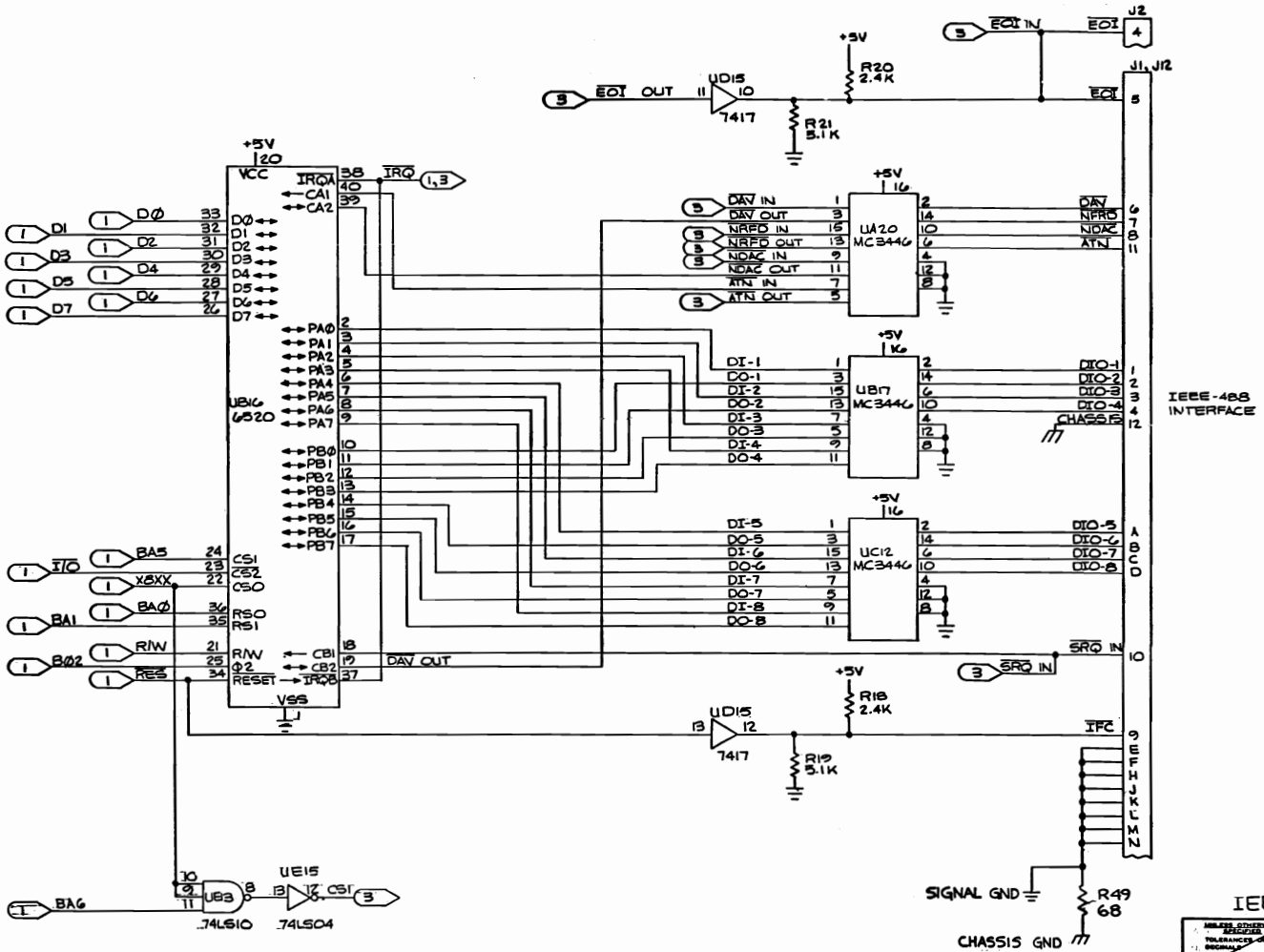

IEEE-488 INTERFACE

commodore

LOGIC DIAGRAM
UNIVERSAL
DYNAMIC PET

SIZE D 8032081 REV E

SCALE NONE SHEET 2 OF 11

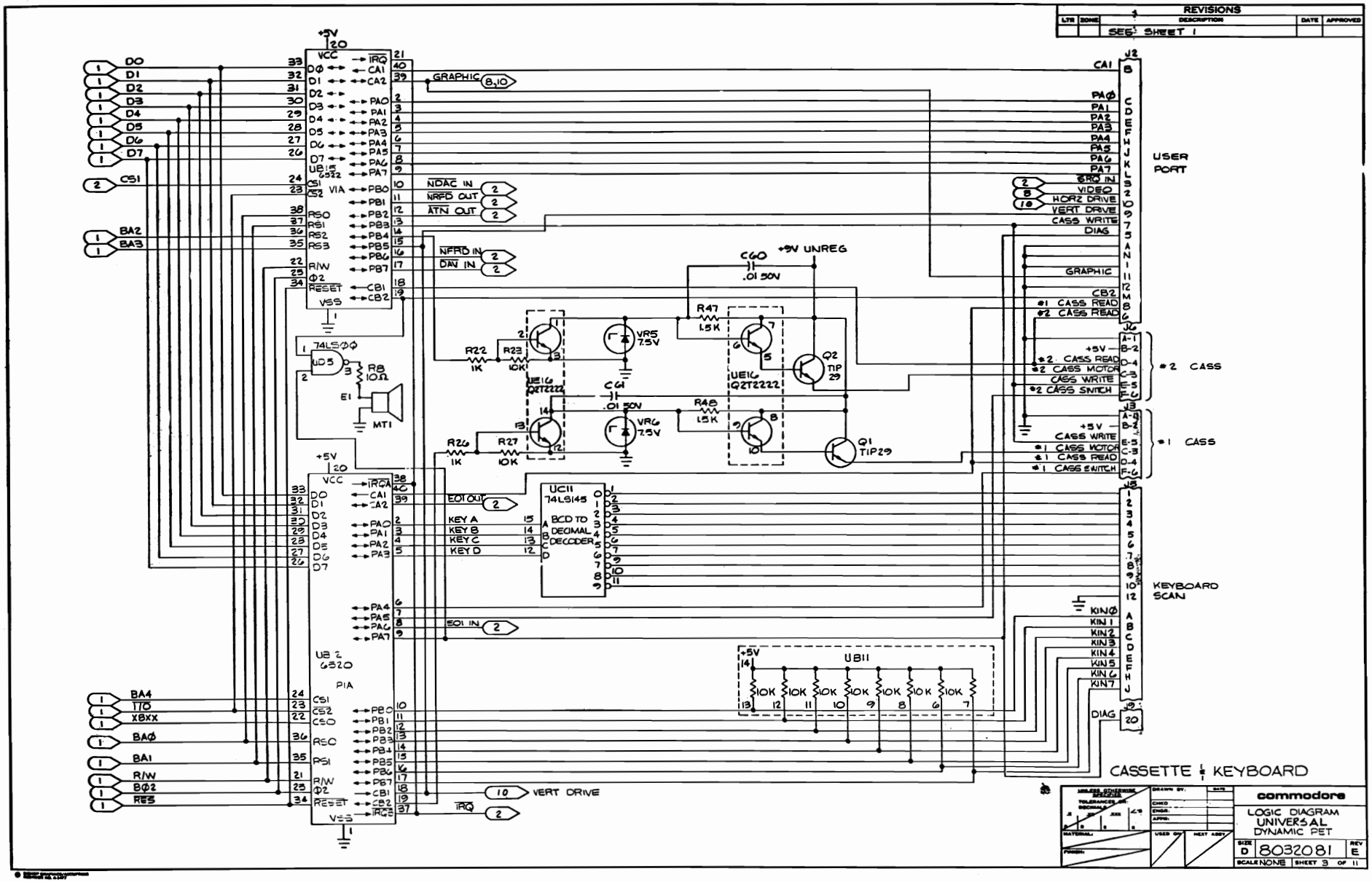
REVISIONS
SEE SHEET 1
UB15 6522 VIA
UB2 6520 PIA
74LS00
UD5
R8 10Ω
E1
MT1
UC11 74LS145 BCD TO DECIMAL DECODER
UB11
UE16 Q2T2222
VR5 7.5V
VR6 7.5V
Q1 TIP29
Q2 TIP 29
+9V UNREG
GRAPHIC
NDAC IN
NRFD OUT
ATN OUT
NRFD IN
DAV IN
EOI OUT
EOI IN
KEY A
KEY B
KEY C
KEY D
VERT DRIVE
IRQ
USER PORT
HORZ DRIVE
VERT DRIVE
CASS WRITE
DIAG
CASS READ
CASS MOTOR
CASS SWITCH
#2 CASS
#1 CASS
KEYBOARD SCAN
KIN0
KIN1
KIN2
KIN3
KIN4
KIN5
KIN6
KIN7
CASSETTE & KEYBOARD
commodore
LOGIC DIAGRAM
UNIVERSAL
DYNAMIC PET
8032081
SCALE NONE
SHEET 3 OF 11

REVISIONS				
LTR	ZONE	DESCRIPTION	DATE	APPROVED
		SEE SHEET 1		

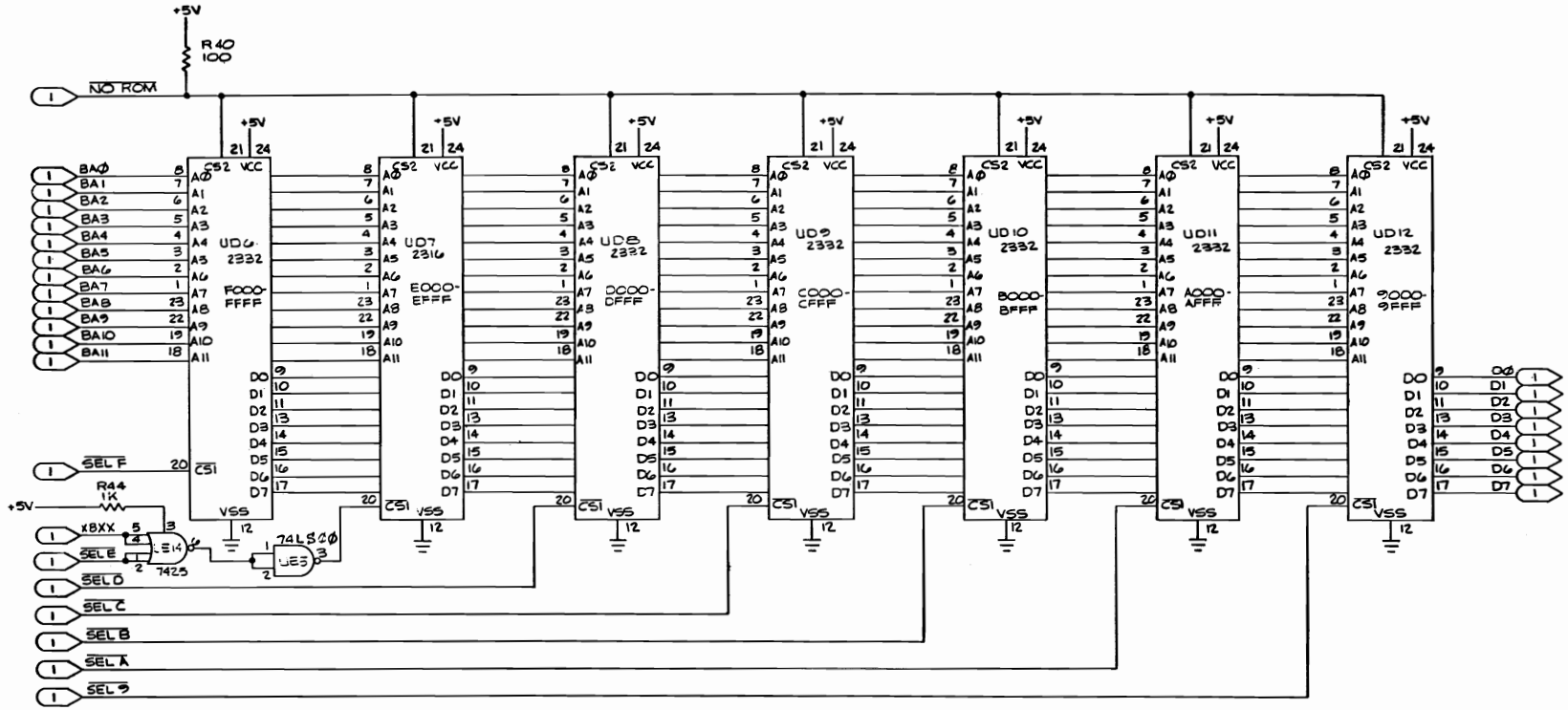

ROMS

UNLESS OTHERWISE SPECIFIED TOLERANCES ON: DECIMAL .XX ±.03 .XXX ±.09 ANGLES ±0°	DRAWN BY: DATE	commodore
MATERIAL:	CHKD: ENGR: APPR:	LOGIC DIAGRAM UNIVERSAL DYNAMIC PET
FINISH:	USED ON: NEXT ASSY:	SIZE D 8032081 REV E
		SCALE NONE SHEET 4 OF 11

REVISIONS				
LTR	ZONE	DESCRIPTION	DATE	APPROVED
		SEE: SHEET 1		

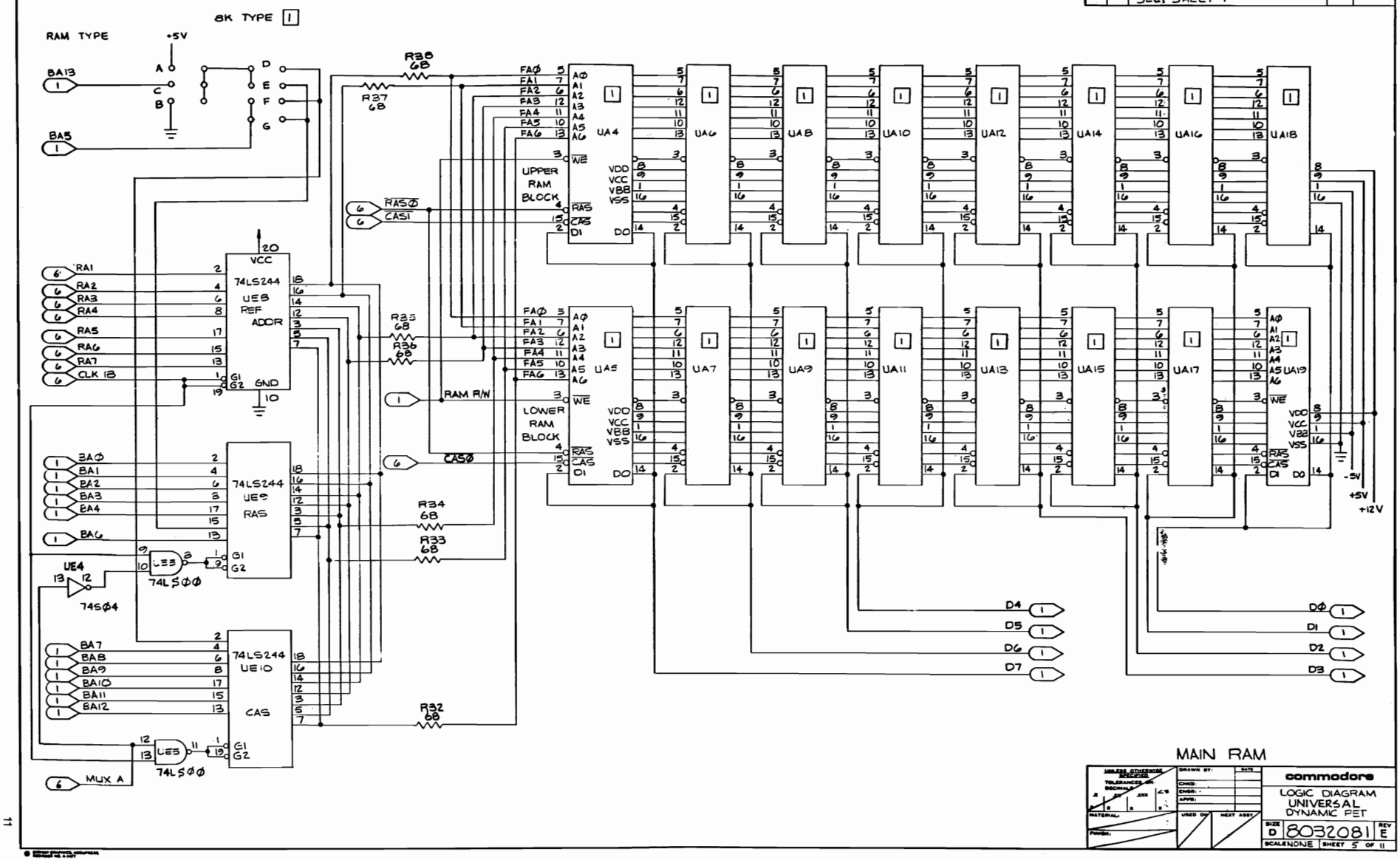

MAIN RAM

commodore

LOGIC DIAGRAM UNIVERSAL DYNAMIC PET

SIZE D 8032081 REV E

SCALE NONE SHEET 5 OF 11

REVISIONS				
LTR	ZONE	DESCRIPTION	DATE	APPROVED
		SEE SHEET 1		

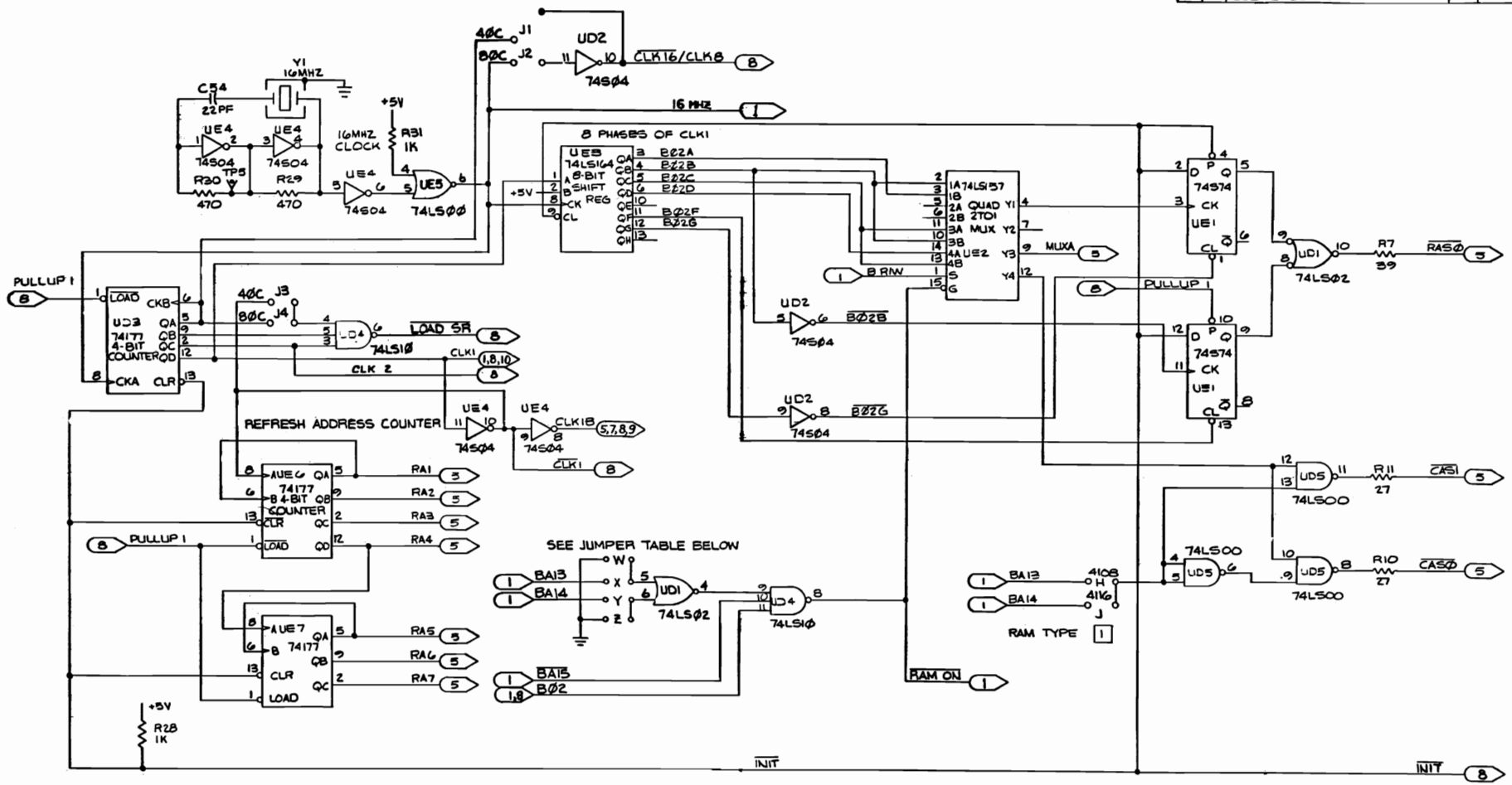

JUMPER TABLE

MEMORY JUMPERS	32K	16K	8K
W	○—○	○—○	○ ○
X	○ ○	○ ○	○—○
Y	○ ○	○—○	○—○
Z	○—○	○ ○	○ ○

MASTER TIMING

commodore

LOGIC DIAGRAM
UNIVERSAL
DYNAMIC PET

SIZE D 8032081 REV E

SCALE NONE SHEET 6 OF 11

REVISIONS				
LTR	ZONE	DESCRIPTION	DATE	APPROVED
		SEE SHEET 1		

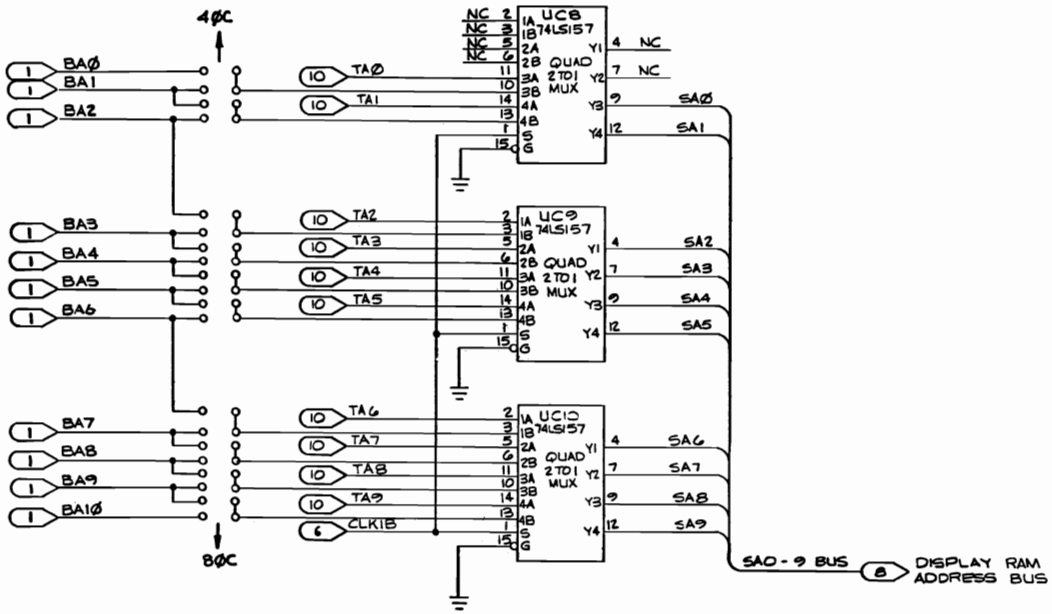

DISPLAY ADDRESS MUX

commodore

LOGIC DIAGRAM
UNIVERSAL
DYNAMIC PET

SIZE D | 8032081 | REV E

SCALE NONE | SHEET 7 OF 11

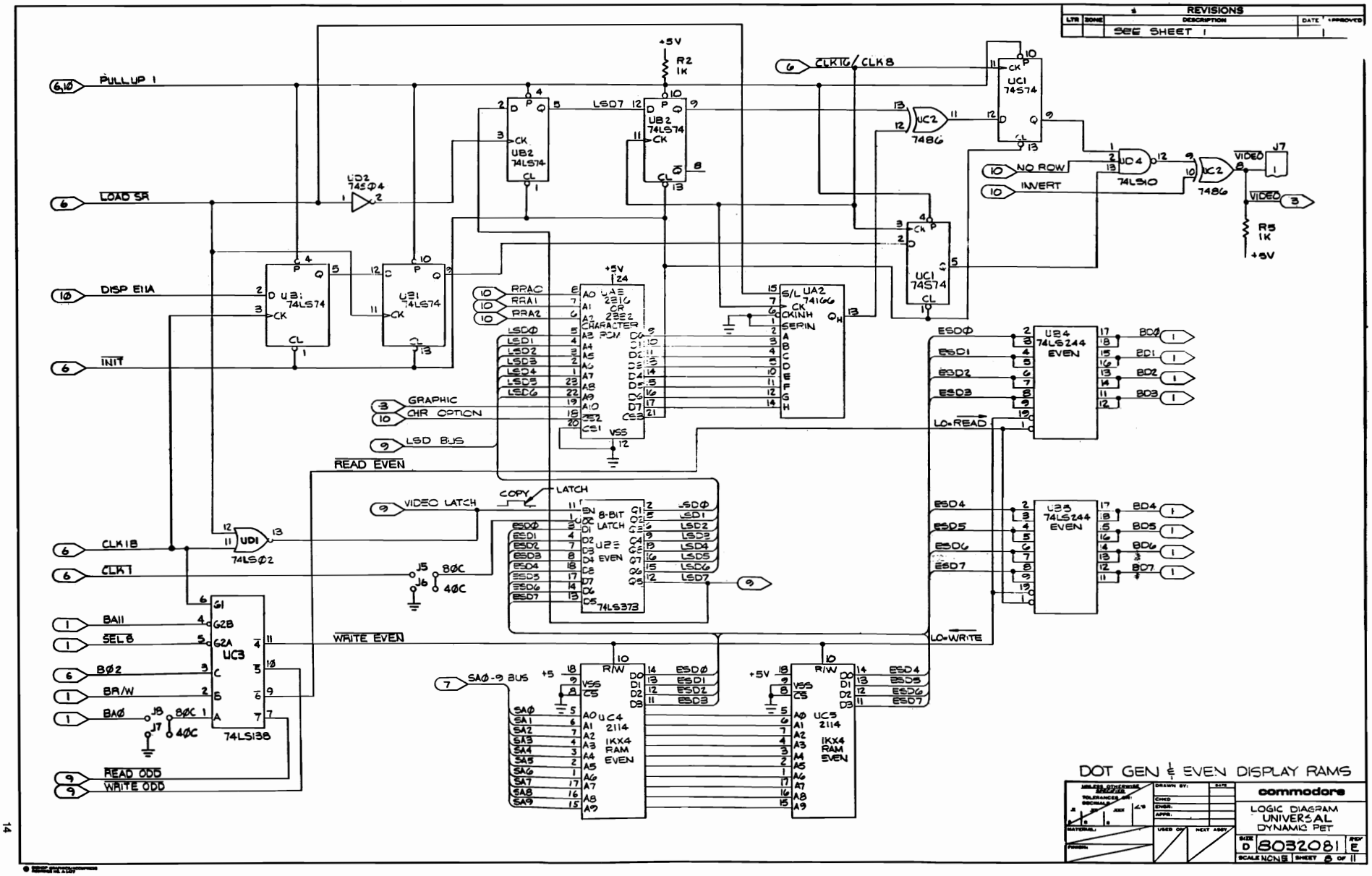
REVISIONS
SEE SHEET 1
PULLUP 1
LOAD SR
DISP EIA
INIT
CLK1B
CLK1
BA11
SEL8
BØ2
BR/W
BAØ
READ ODD
WRITE ODD
UD2 74SØ4
UB1 74LS74
U31 74LS74
UB2 74LS74
R2 1K
+5V
LSD7
UD1 74LSØ2
UC3 74LS138
J5 8ØC
J6 4ØC
J8 8ØC
J7 4ØC
RRA0
RRA1
RRA2
UA3 2316 CR 2332 CHARACTER ROM
GRAPHIC
CHR OPTION
LSD BUS
READ EVEN
VIDEO LATCH
COPY
LATCH
U2E 8-BIT LATCH EVEN 74LS373
WRITE EVEN
SAØ-9 BUS
UC4 2114 1KX4 RAM EVEN
UC5 2114 1KX4 RAM EVEN
R/W
CLK1Ø
CLK8
UC1 74S74
UC2 7486
UC4 74LS10
NO ROW
INVERT
VIDEO
J7
R5 1K
S/L UA2 74166
CKINH
SERIN
ESDØ
ESD1
ESD2
ESD3
ESD4
ESD5
ESD6
ESD7
LO-READ
LO-WRITE
U24 74LS244 EVEN
U25 74LS244 EVEN
BDØ
BD1
BD2
BD3
BD4
BD5
BD6
BD7
DOT GEN & EVEN DISPLAY RAMS
commodore
LOGIC DIAGRAM
UNIVERSAL
DYNAMIC PET
SIZE D
8032081
REV E
SCALE NONE
SHEET 8 OF 11

REVISIONS				
LTR	ZONE	DESCRIPTION	DATE	APPROVED
		SEE SHEET 1		

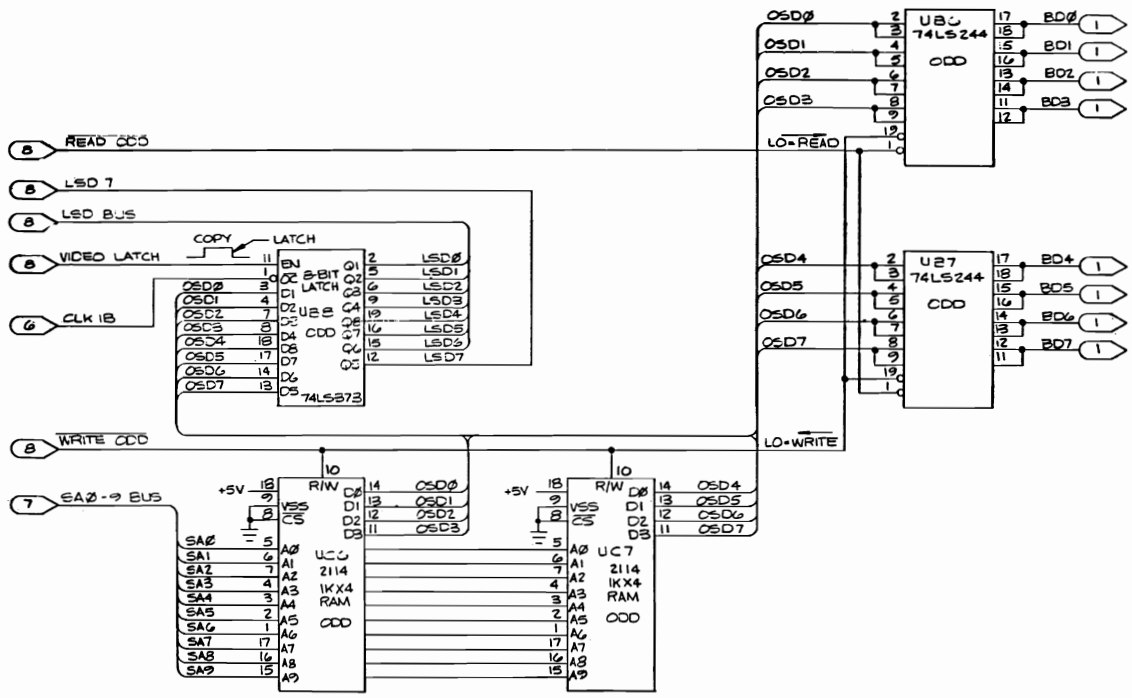

ODD DISPLAY RAMS

UNLESS OTHERWISE SPECIFIED TOLERANCES ON DECIMALS	DRAWN BY:	DATE	commodore
	CHKD		LOGIC DIAGRAM UNIVERSAL DYNAMIC PET
	ENGR		
	APPR:		
MATERIAL:	USED ON	NEXT ASSY	SIZE D 8032081 REV E
FINISH:			SCALE NONE SHEET 9 OF 11

REVISIONS				
LTR	ZONE	DESCRIPTION	DATE	APPROVED
		SEE: SHEET 1		

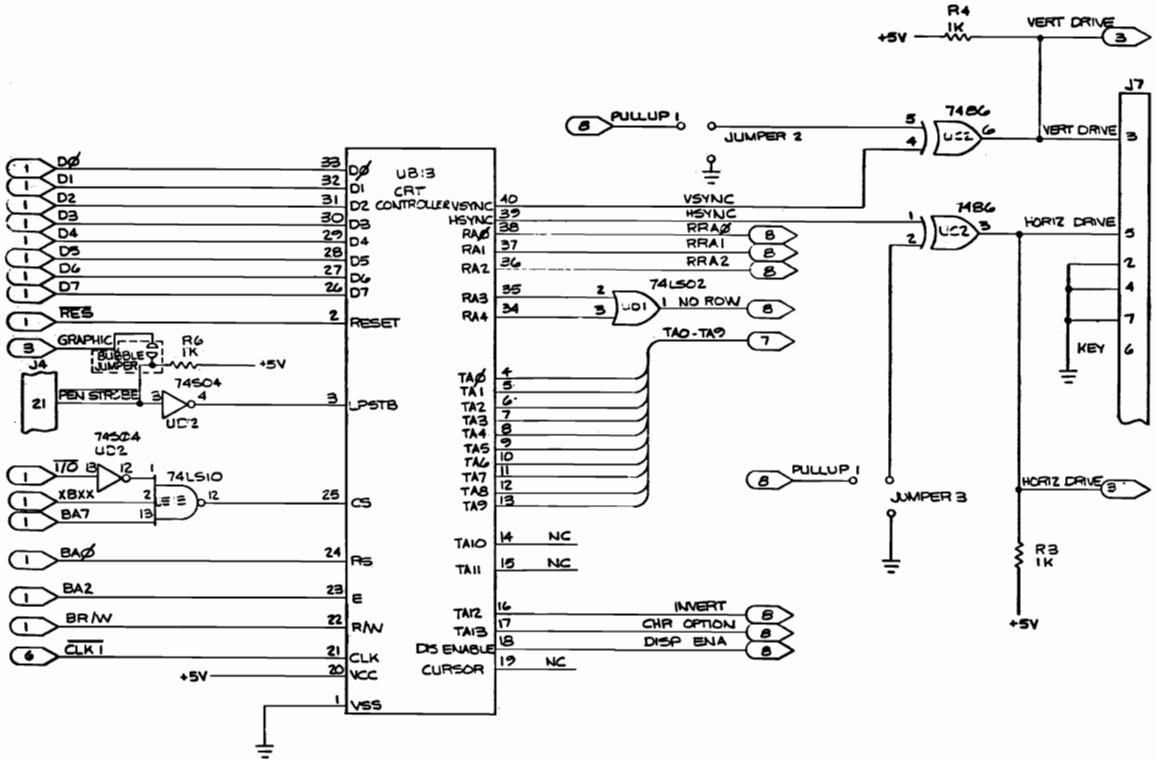

CRTC AND SYNC BUFFERS

commodore

LOGIC DIAGRAM
UNIVERSAL
DYNAMIC PET

SIZE D | 8032081 | REV E

SCALE NONE | SHEET 10 OF 11

REVISIONS				
LTR	ZONE	DESCRIPTION	DATE	APPROVED
		SEE SHEET 1		

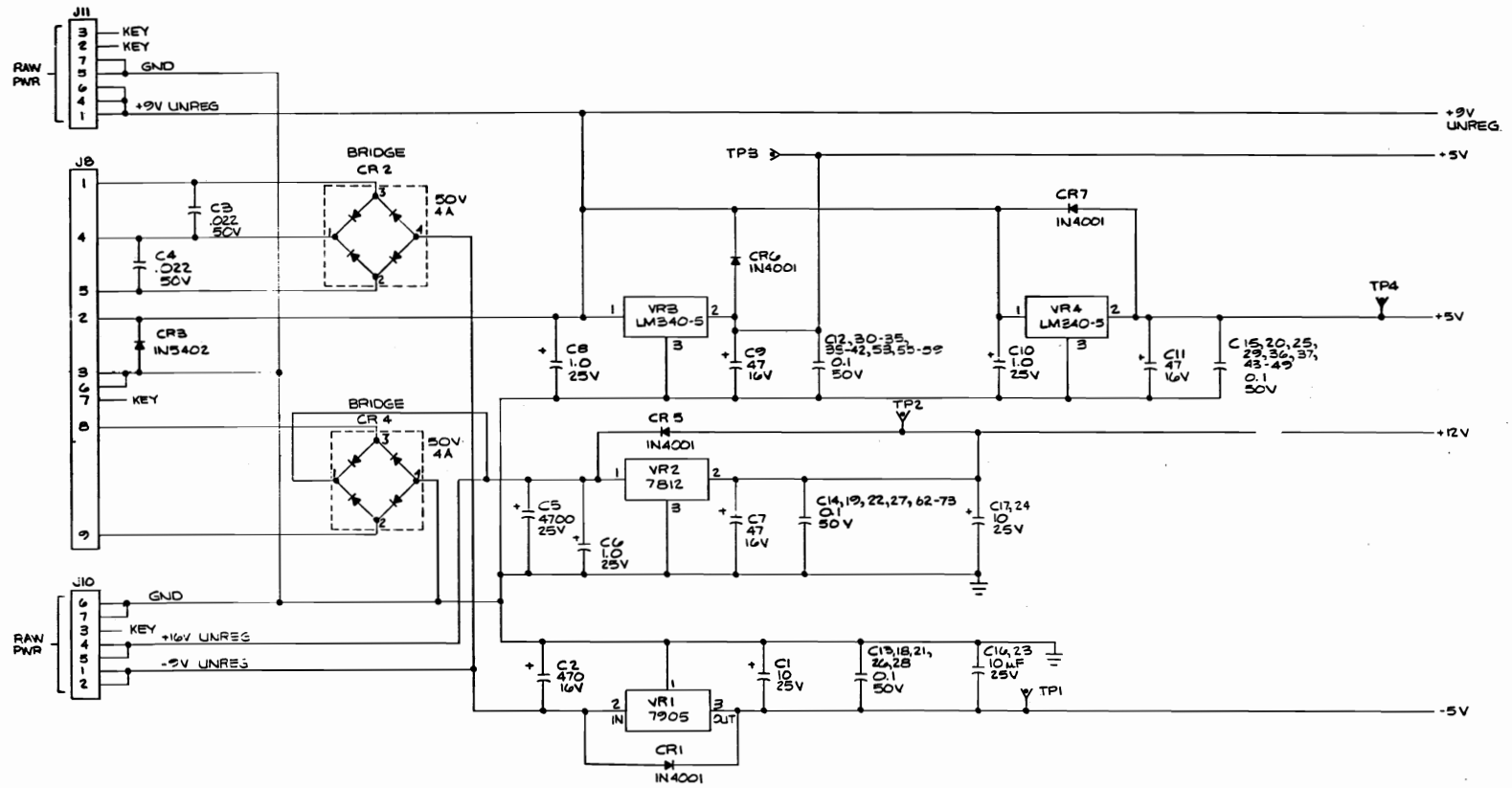

VOLTAGE REGULATOR

UNLESS OTHERWISE SPECIFIED TOLERANCES ON DECIMALS	DRAWN BY:	DATE	commodore
	CHKD		LOGIC DIAGRAM UNIVERSAL DYNAMIC PET
MATERIAL:	USED ON	NEXT ASSY	SIZE D 8032081 REV E
FINISH:			SCALE NONE SHEET 11 OF 11

LTR	ZONE	DESCRIPTION	DATE	APPROVED
A		INITIAL RELEASE	1/1/79	
B		PER ECN 825	7/10/79	
C		PER ECO 1041	7/11/79	
D		REV PER ECO 1874	8-16-84	

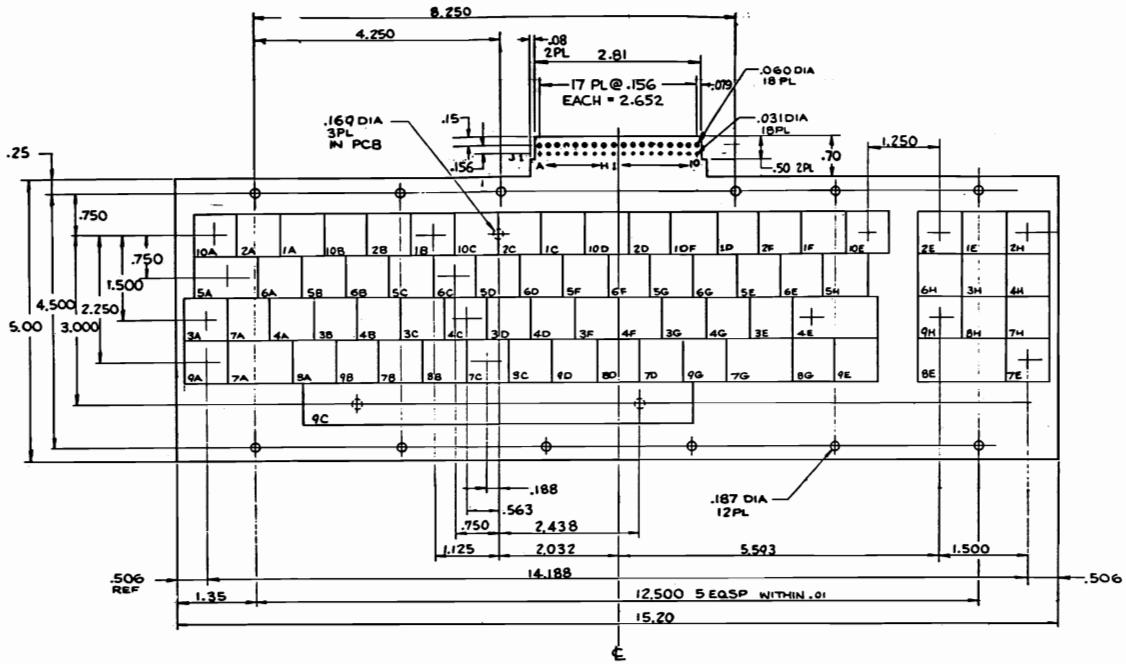

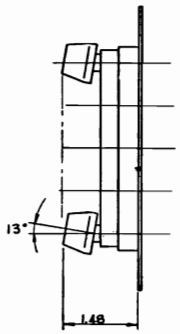

7 CONTACT RESISTANCE SHALL NOT EXCEED 1KΩ OVER LIFE OF CONTACT (10 MILLION OPERATIONS)
6 CONTACT TO BE PROTECTED FROM CONTAMINATION OVER LIFE OF CONTACT
5 KEYCAPS ARE TWO SHOT MOLDED
4 KEYCAP COLOR : DARK GRAY WITH WHITE LEGEND
3 ALL KEYS ARE MOMENTARY ACTION EXCEPT FOR SHIFT LOCK KEY WHICH IS ALTERNATE ACTION.
2 KEYTAB ARTWORK TO BE APPROVED BY COMMODORE
1 PCB MATL : .062 ± .007 FR2 PAPER (FR4 GLASS ALT.) EPOXY 1OZ COPPER CLAD ON 1 SIDE
NOTES : UNLESS OTHERWISE SPECIFIED

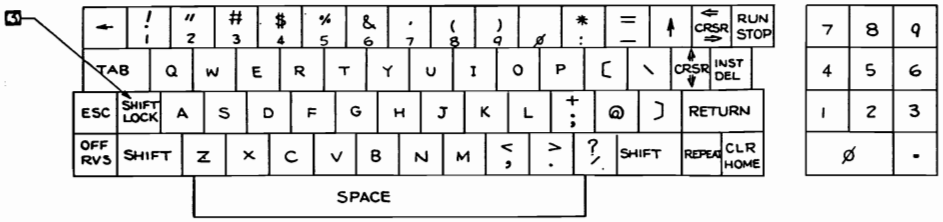

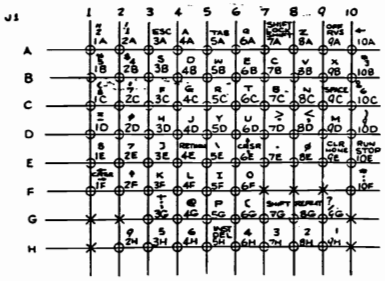

UNLESS OTHERWISE SPECIFIED TOLERANCES ON DECIMALS .X ±.02 .XX ±.010 .XXX ±.5° ∠ ±1°	DRAWN BY:	DATE 12-15-78	commodore
MATERIAL:	CHKD BY:		KEYBOARD, BUSINESS 73 STATIONS
FINISH:	ENGR BY:		
	APPR BY:		SIZE D 320284 REV D
	USED ON	NEXT ASSY	SCALE 1/1 SHEET 1 OF 1

PART NO.	DESCRIPTION
8032051-01	POWER SUPPLY ASSY, 8032 117V UL

REVISIONS

LTR	ZONE	DESCRIPTION	DATE	APPROVED
A		PRODUCTION RELEASE	8/26/80	
B		REV PER ECO 1935	12/15/80	
C		REV PER ECO 2028	3/20/81	
D		REV PER ECO 2284	10/6/81	
E		REV. PER ECO 2777	8/25/82	

6 REFER TO PART SUBSTITUTE INDEX P/N 321233.

5 SWITCH SHOWN IN 'OFF" POSITION.

4. ALL LEADS WILL HAVE A MINIMUM OF ONE WRAP AROUND TERMINALS PRIOR TO SOLDERING.

3 IDENTIFY WITH COMMODORE PART NO. 8032051 AND APPLICABLE DASH NO. LOCATE APPROX AS SHOWN.

2 DASH 04 CONFIGURATION SHALL BE USED FOR VDE, SEV & SEMKO.

1. SHEET 3 OF 3 SIZE D
ASSY DWG

NOTES - UNLESS OTHERWISE SPECIFIED:

commodore	TITLE: POWER SUPPLY ASSY, 8032	DRAWN BY: K. CHRISTENSEN	DATE 4/22/80	ENGR:		SIZE B	DRAWING NUMBER 8032051
		CHKD: FORMAT N.P. CHK ONLY	8-19-80	APPR:			SHEET 1 OF 3

BISHOP GRAPHICS/ACCUPRESS REORDER NO. A-7849

QUANTITY REQD PER PART/DASH NO. 01	ITEM	BS	PART NUMBER	DESCRIPTION	REF DES	BEND	NOTES
	1						
1	2	D	8032043-02	CHASSIS, POWER, UNIVERSAL			
1	3	C	320902-01	TRANSFORMER	T1		SEE NOTE 6 FOR SUBSTITUTE
	4						
	6						
1	7	B	900102-01	CAPACITOR 23,000 MFD	C1		
	8						
1	9	B	903467-03	FILTER POWER CONNECTOR			
	11						
	12						
	13						
1	14	B	320289-01	DYNAMIC PET POWER HARNESS			
	15						
1	16	B	903557-04	FUSE, 125V SLO-BLO 1.6A	F1		
	18						
	19						
1	20	B	903611-03	FUSE HOLDER	XF1		FOR SUBSTITUTE SEE NOTE 6
1	21	B	904507-01	SWITCH, ROCKER	SW1		
	22						
	23						
	24						
5	25	B	320479-02	TUBE, SHRINKABLE			
3	26	B	320478-01	TUBE, SHRINKABLE			
2	27	B	320059-01	LEAD WIRE (BLACK)			
	28						
							FOR SUBSTITUTE SEE NOTE 6
1	30	B	903612-02	FUSECARRIER			
2	31	B	906630-03	SCREW, PAN HEAD, #10-32 x .250 LG			
2	32	B	905650-03	WASHER, LOCK, INT TOOTH #10			
	33						
1	34	C	320925-05	GROUND CABLE ASSY			
2	35	B	906600-06	SCREW PAN HEAD #4-40 x .438 LG			
2	36	B	905970-05	NUT KEPS #4-40			
	37						

commodore	TITLE: POWER SUPPLY ASSY, 8032	DRWN BY: K. CHRISTENSEN	DATE 4 22 80	ENGR:	DATE	SIZE B	8032051	REV E	SHT 2/3
		CHKD: N. P.	8-19-80	APPR:					

REVISIONS				
LTR	ZONE	DESCRIPTION	DATE	APPROVED
		SEE SHEET 1		

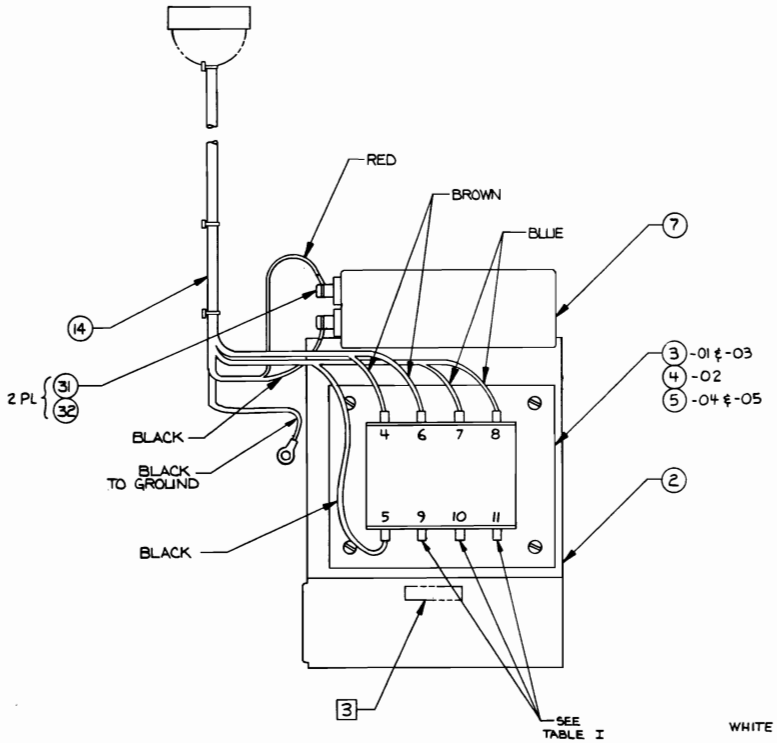

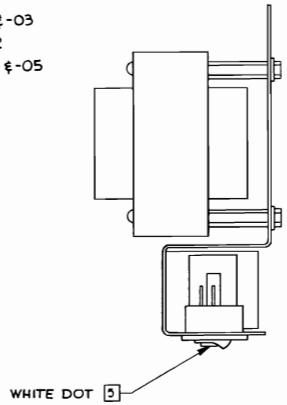

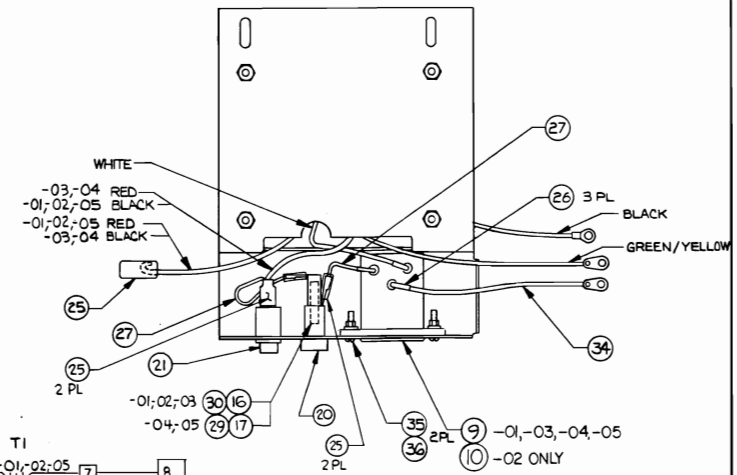

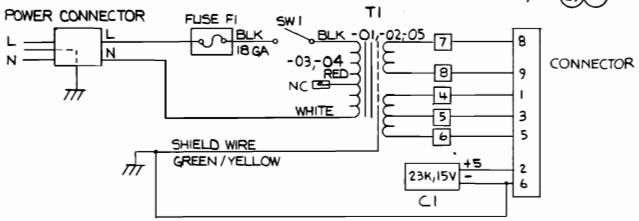

WIRING DIAGRAM

TABLE I

TERMINAL	VOLTAGE	USAGE
9 & 10	15	9" VIDEO
9 & 11	21	12" VIDEO

-01 THRU -05 SHOWN

UNLESS OTHERWISE SPECIFIED TOLERANCES ON DECIMALS	DRAWN BY K. CHRISTENSEN	DATE 4-23-80	commodore
	CHKD N.P.	8-15-80	POWER SUPPLY ASSY, 8032
	ENGR		
	APPR		
MATERIAL	USED ON PET 8032 8016	NEXT ASSY 8032008 8016002	SIZE D 8032051 REV E
FINISH			SCALE NONE SHEET 3 OF 3

ADVANCED REPRO

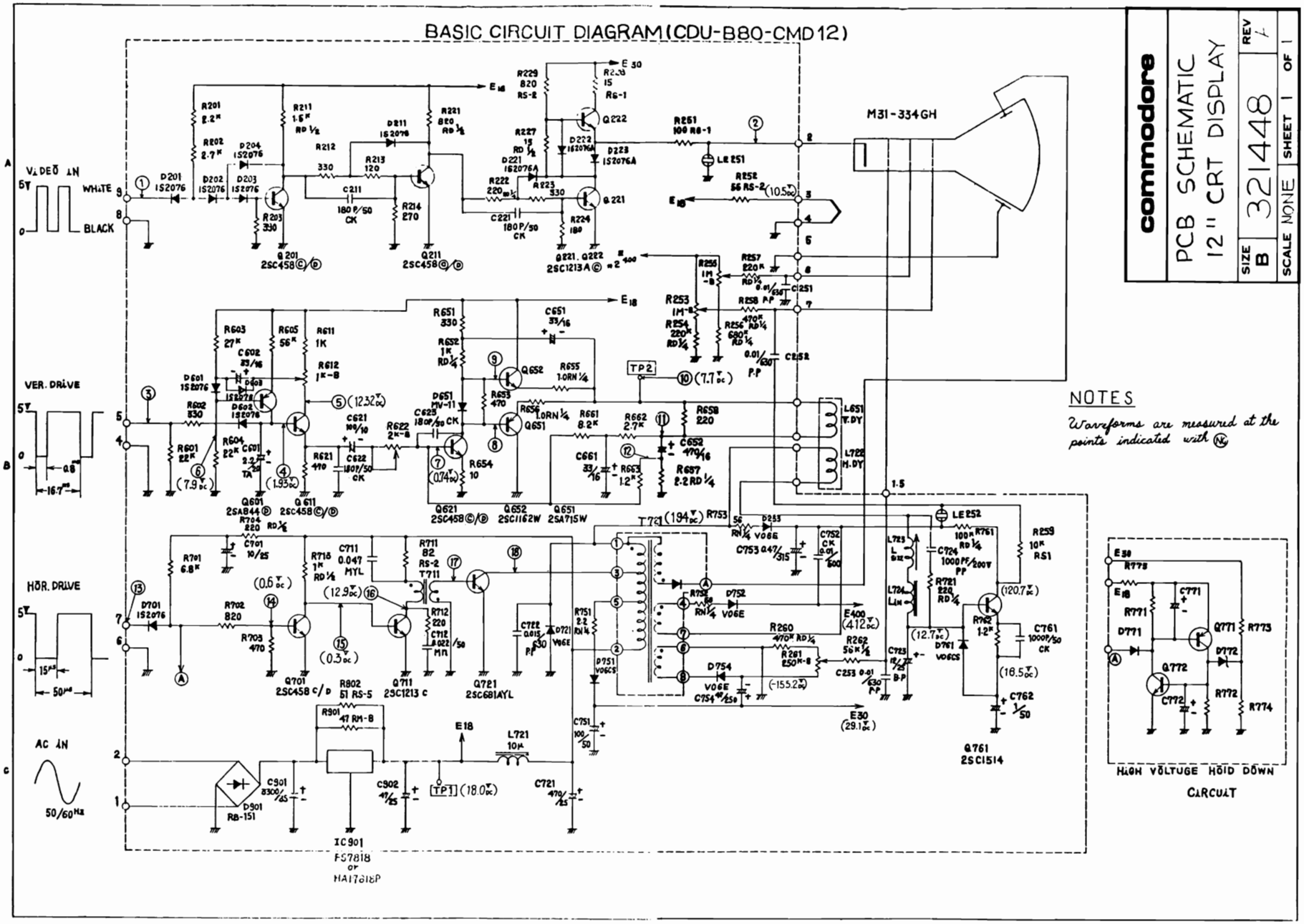
BASIC CIRCUIT DIAGRAM (CDU-B80-CMD12)
commodore
PCB SCHEMATIC
12" CRT DISPLAY
SIZE B
321448
REV 1
SCALE NONE
SHEET 1 OF 1
M31-334GH
VIDEO IN
WHITE
BLACK
VER. DRIVE
HOR. DRIVE
AC IN
50/60Hz
NOTES
Waveforms are measured at the points indicated with
HIGH VOLTAGE HOLD DOWN CIRCUIT
IC901
FS7818
or
HA17818P

321450

REVISIONS				
LTR	ZONE	DESCRIPTION	DATE	APPROVED
A		PRODUCTION RELEASE	12/29/80	

THE INFORMATION AND DATA CONTAINED HEREIN IS PROPRIETARY AND SHALL NOT BE USED OR DUPLICATED WITHOUT PERMISSION OF COMMODORE BUSINESS MACHINES, INC.

DRAWN BY:	DATE 12-5-80	commodore
CHKD:	12/9/80	TITLE: PCB WAVEFORMS 12" CRT DISPLAY
ENGR:	12/29/80	
PROD:		
APPD:		SIZE A / DWG NO. 321450 / REV A
[redacted]		RELEASE DATE / SHEET 1 OF 10

VIDEO (1/1)

1

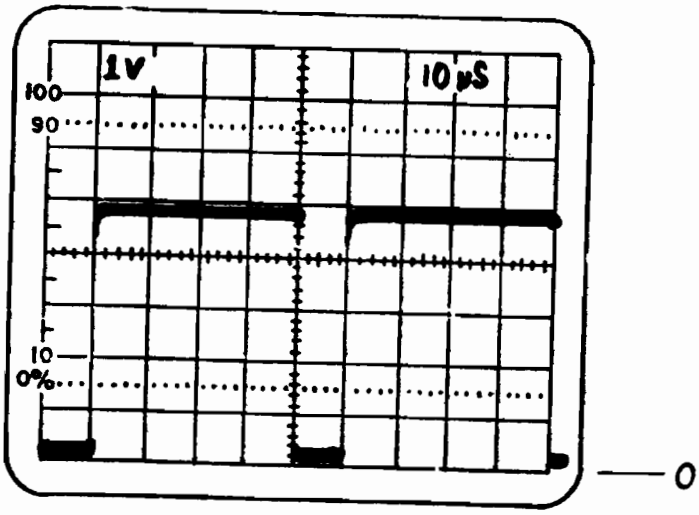

2

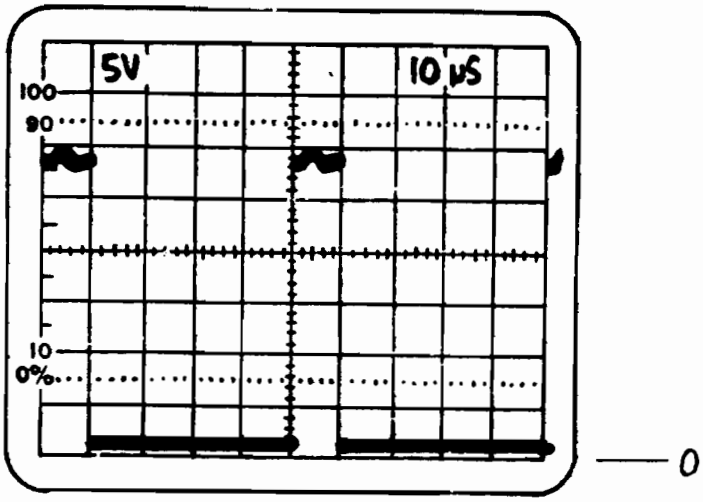

commodore

PCB WAVEFORMS
12" CRT DISPLAY

SIZE		REV
A	321450	A
SCALE NONE	SHEET 2 OF 10	

VERTICAL (1/3)

3

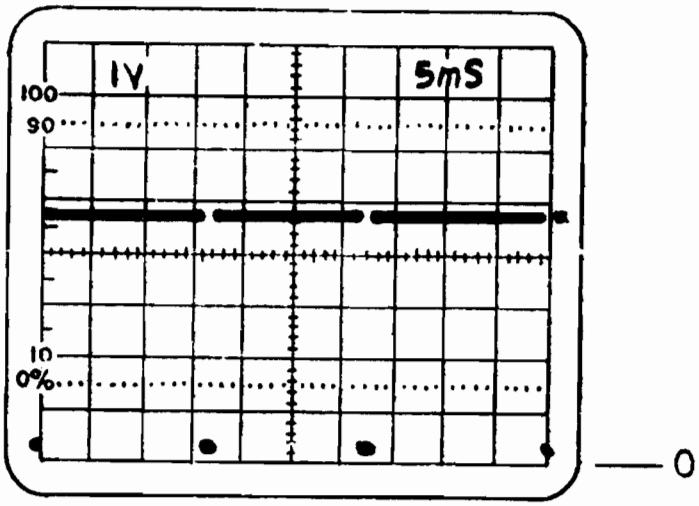

4

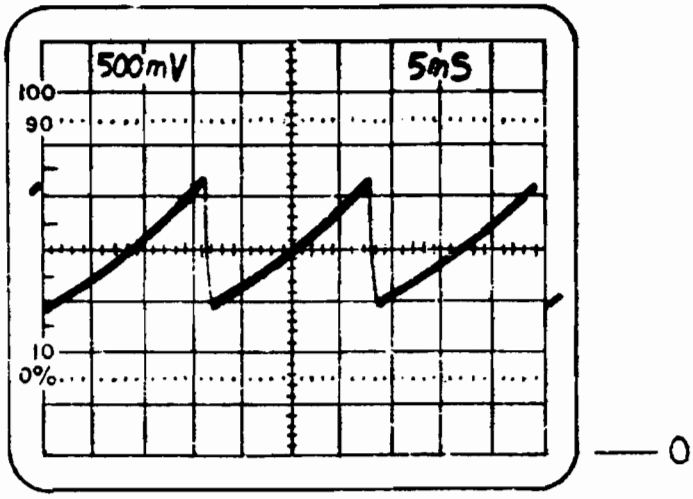

commodore		
PCB WAVEFORMS 12" CRT DISPLAY		
SIZE A	321450	REV A
SCALE NONE	SHEET 3 OF 10	

VERTICAL (1/3)

5

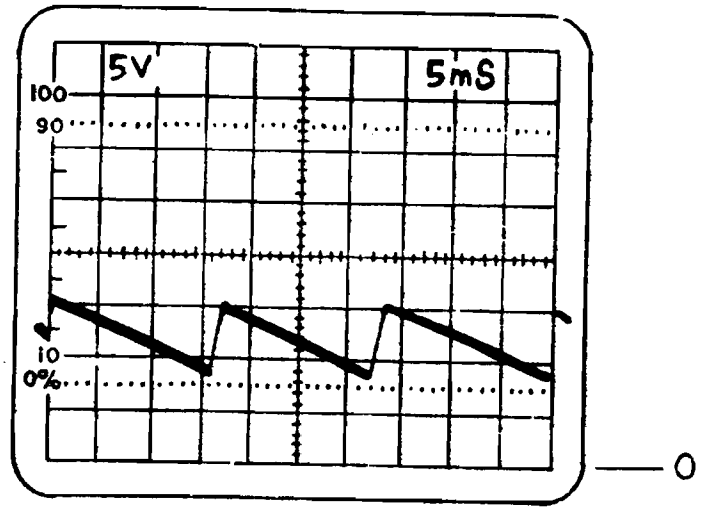

6

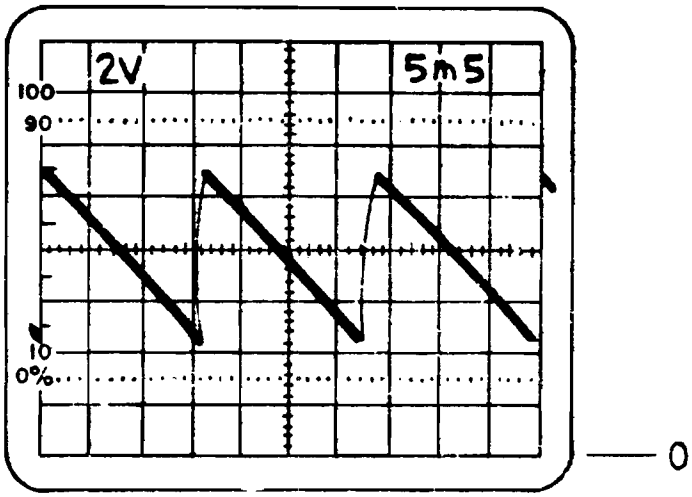

commodore		
PCB WAVEFORMS 12" CRT DISPLAY		
SIZE A	321450	REV A
SCALE NONE	SHEET 4 OF 10	

VERTICAL (2/3)

7

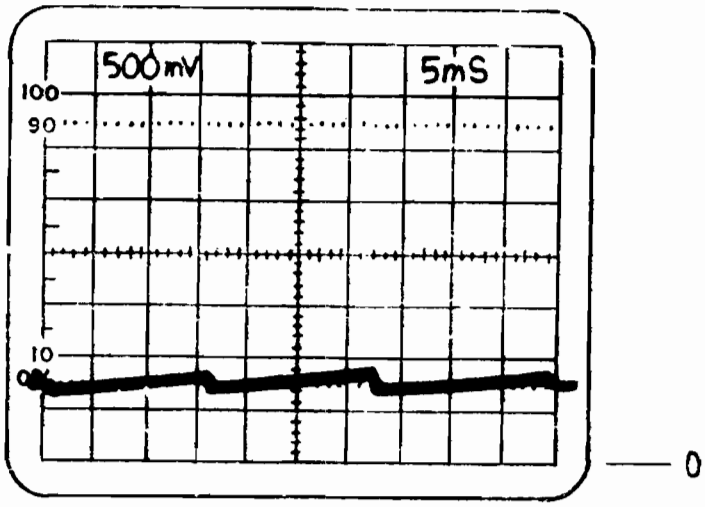

8

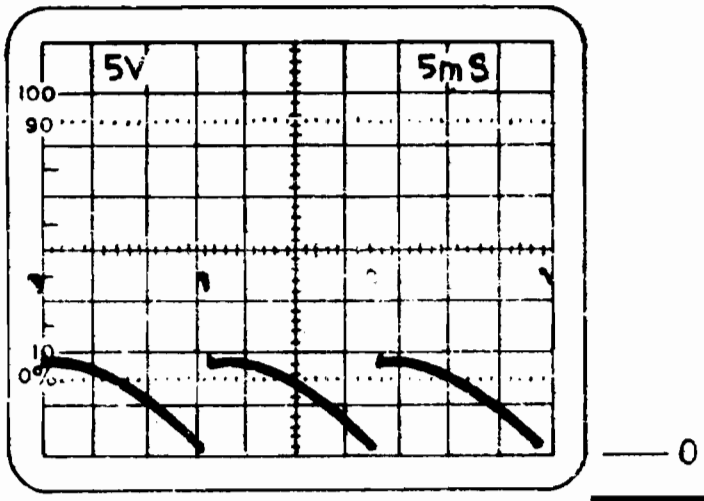

commodore		
PCB WAVEFORMS 12" CRT DISPLAY		
SIZE A	321450	REV A
SCALE NONE	SHEET 5 OF 10	

VERTICAL (2/3)

(9)

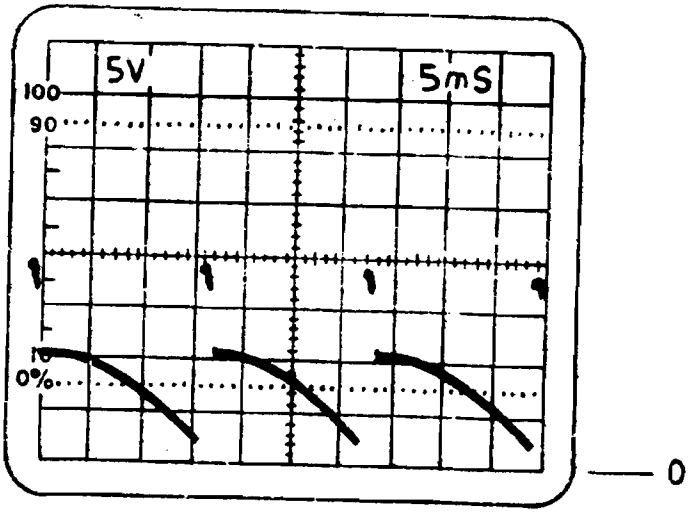

(10)

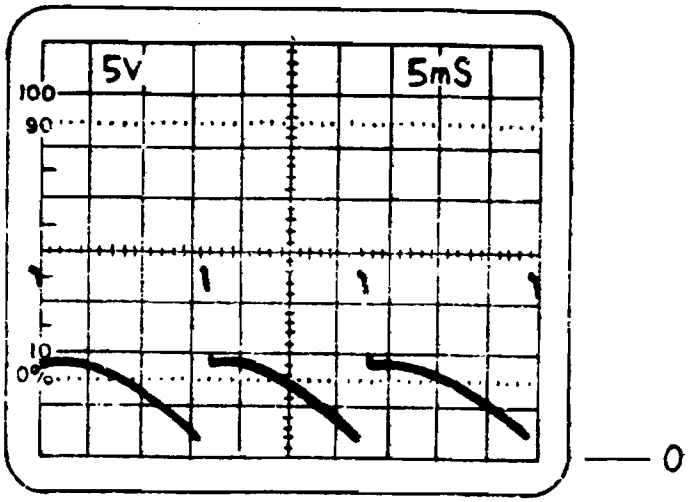

commodore		
PCB WAVEFORMS 12" CRT DISPLAY		
SIZE A	321450	REV A
SCALE NONE	SHEET 6 OF 10	

VERTICAL (3/3)

(11)

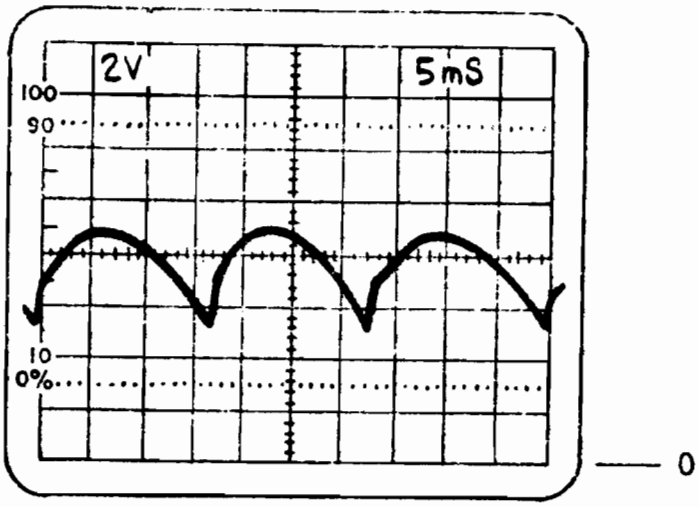

(12)

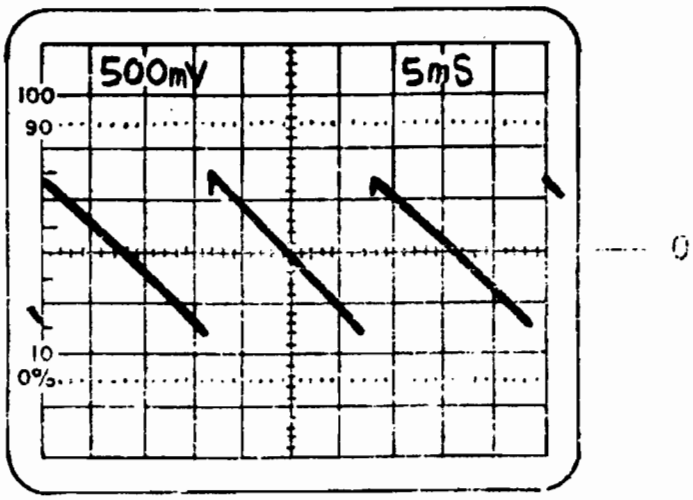

commodore		
PCB WAVEFORMS 12" CRT DISPLAY		
SIZE A	321450	REV A
SCALE NONE	SHEET 7 OF 10	

HORIZONTAL (1/2)

(13)

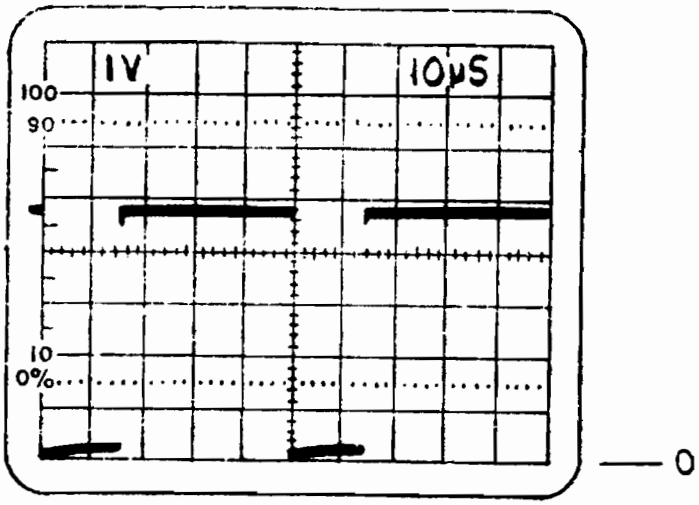

(14)

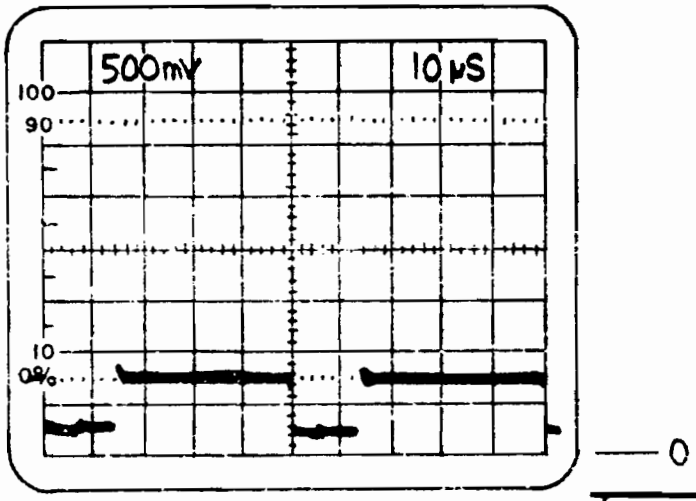

commodore		
PCB WAVEFORMS 12" CRT DISPLAY		
SIZE A	321450	REV A
SCALE NONE	SHEET 8 OF 10	

HORIZONTAL (1/2)

15

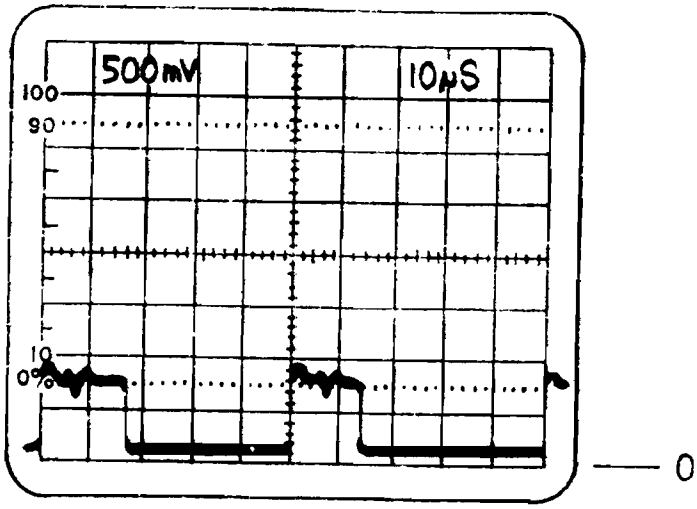

16

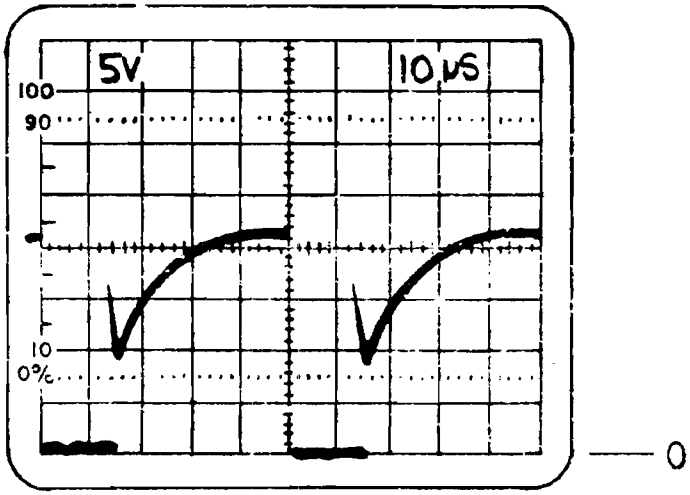

commodore		
PCB WAVEFORMS 12" CRT DISPLAY		
SIZE A	321450	REV A
SCALE NONE	SHEET 9 OF 10	

HORIZONTAL (2/2)

(17)

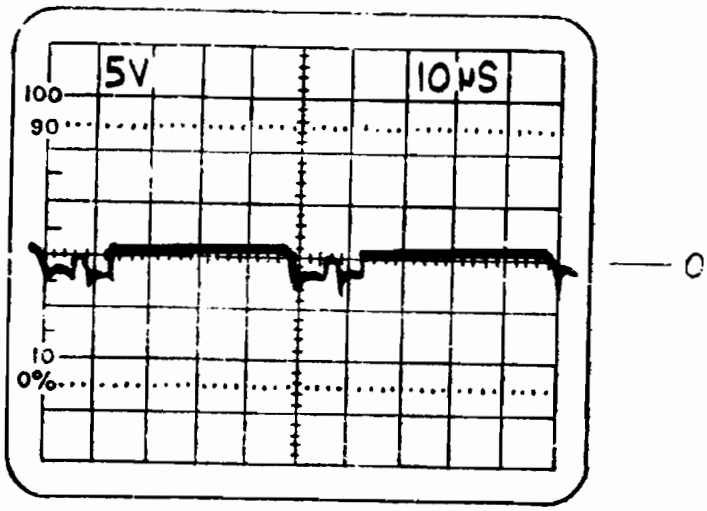

(18)

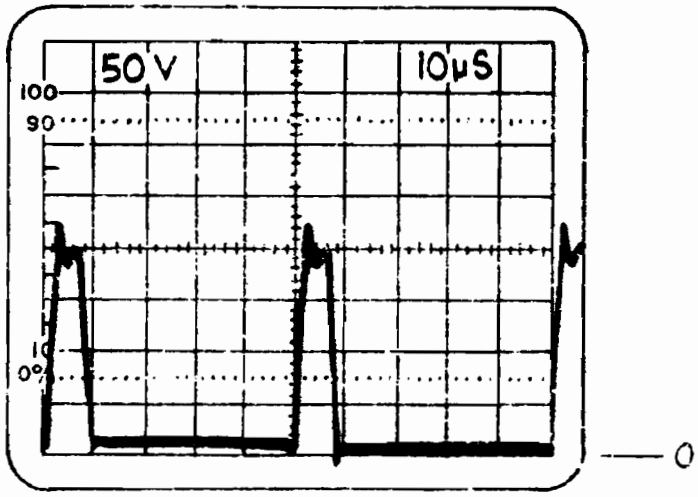

commodore		
PCB WAVEFORMS 12" CRT DISPLAY		
SIZE A	321450	REV A
SCALE NONE	SHEET 10 OF 10	

321447

REVISIONS				
LTR	ZONE	DESCRIPTION	DATE	APPROVED
A		PRODUCTION RELEASE	12/29/80	C. Walker

THE INFORMATION AND DATA CONTAINED HEREIN IS PROPIETARY AND SHALL NOT BE USED OR DUPLICATED WITHOUT PERMISSION OF COMMODORE BUSINESS MACHINES, INC.

DRAWN BY:	DATE 12-7-80	commodore			
CHKD:	12/9/80	TITLE: PCB WAVEFORMS 9" CRT DISPLAY			
ENGR:	12/29/80				
PROD:					
APPD:			SIZE A	DWG NO. 321447	REV A
APPD:		RELEASE DATE		SHEET 1 OF 10	

VIDEO (1/1)

1

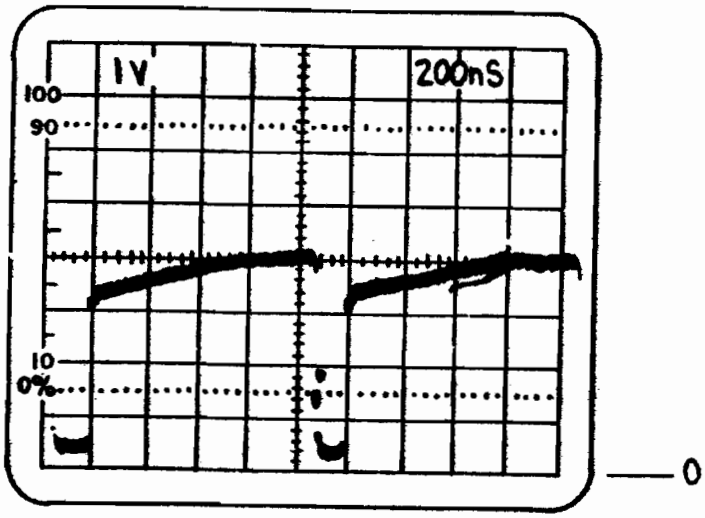

2

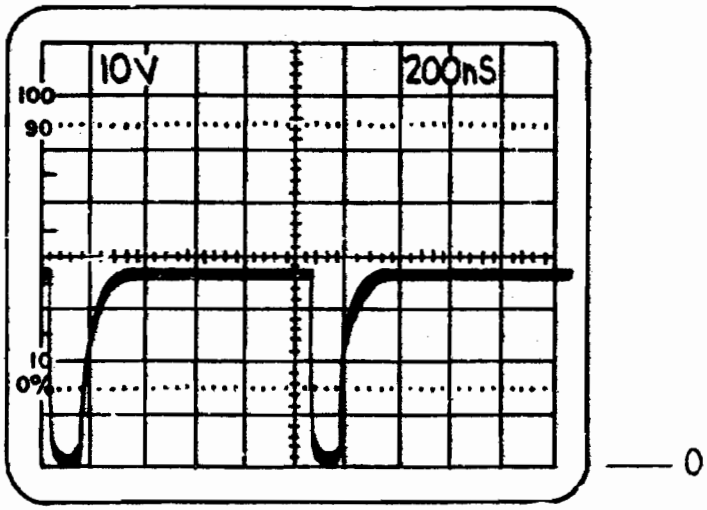

commodore		
PCB WAVEFORMS 9" CRT DISPLAY		
SIZE A	321447	REV A
SCALE NONE	SHEET 2 OF 10	

VERTICAL (1/3)

3

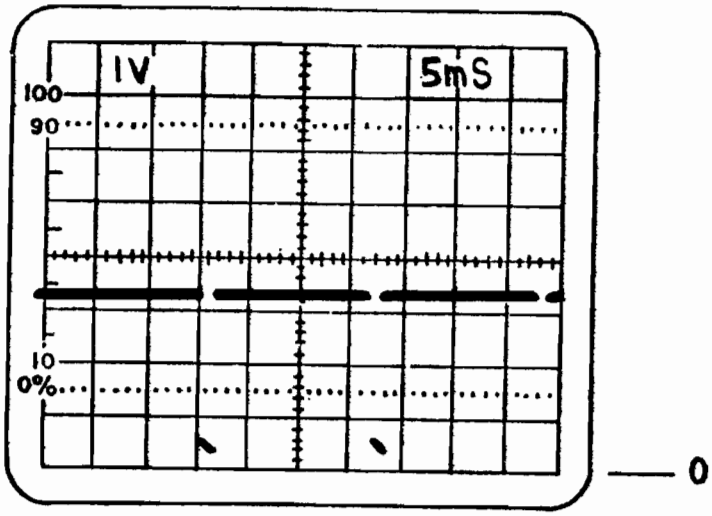

4

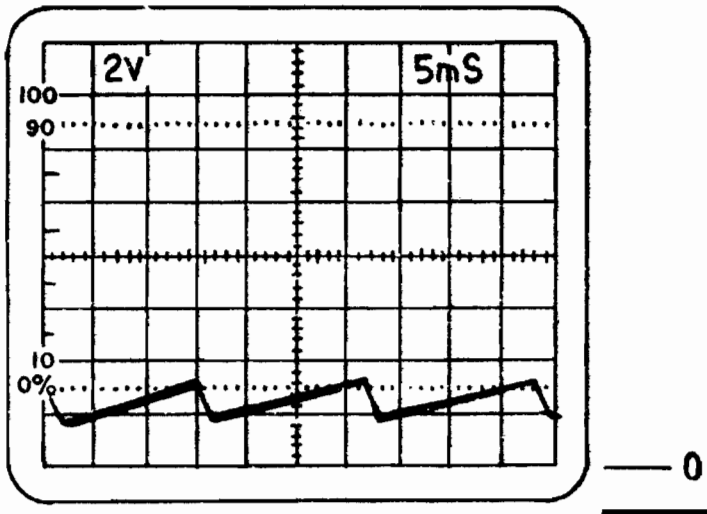

commodore		
PCB WAVEFORMS 9" CRT DISPLAY		
SIZE A	321447	REV A
SCALE NONE	SHEET 3 OF 10	

VERTICAL (1/3)

5

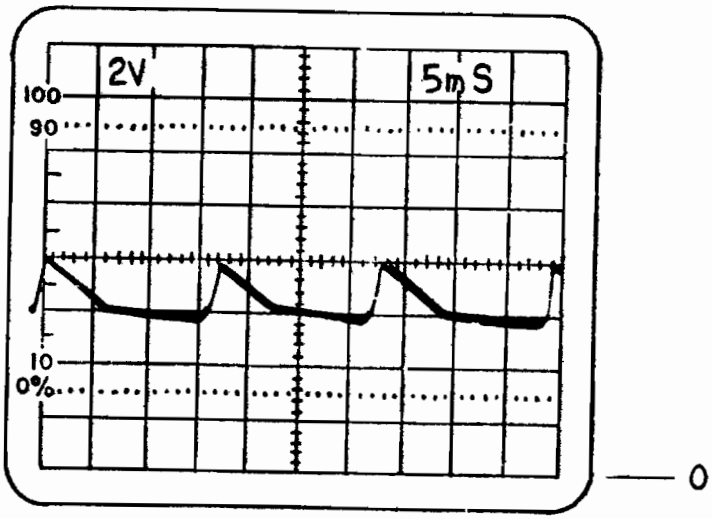

6

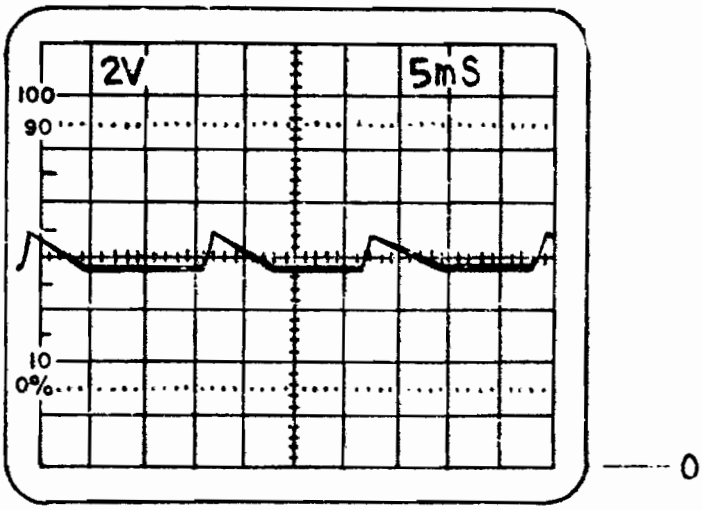

commodore		
PCB WAVEFORMS 9" CRT DISPLAY		
SIZE A	321447	REV A
SCALE NONE	SHEET 4 OF 10	

VERTICAL (2/3)

7

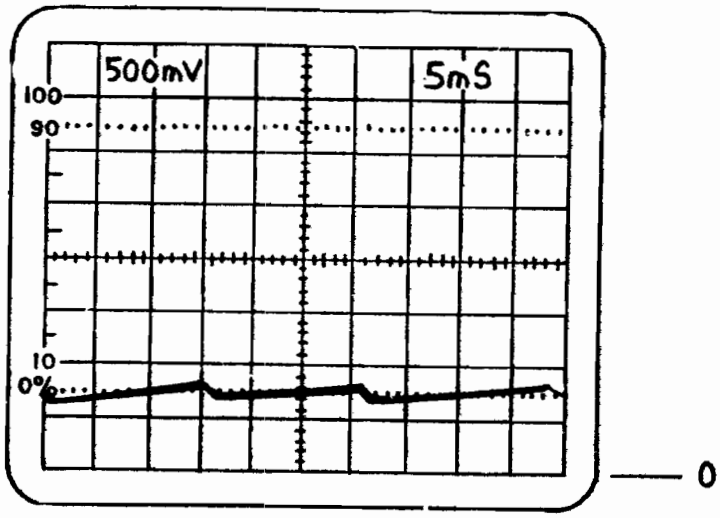

8

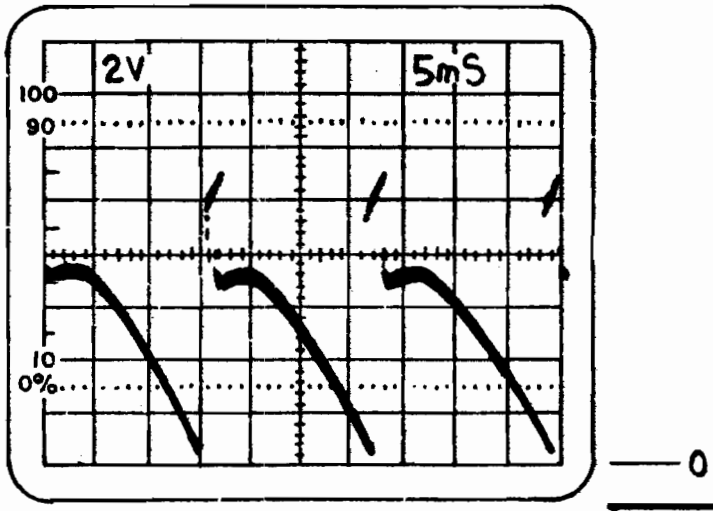

commodore		
PCB WAVEFORMS 9" CRT DISPLAY		
SIZE A	321447	REV A
SCALE NONE	SHEET 5 OF 10	

VERTICAL (2/3)

9

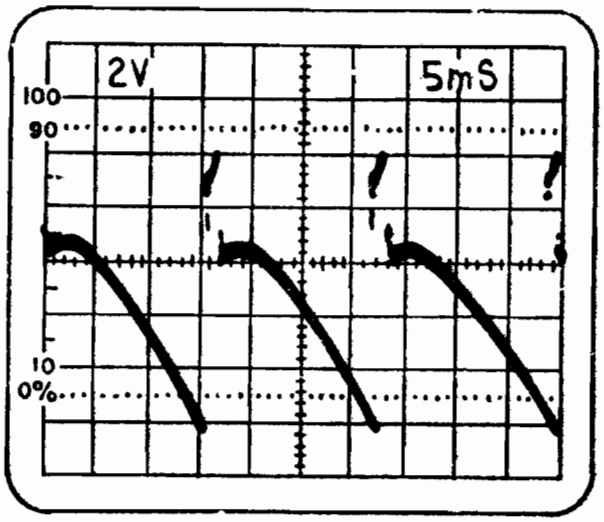

0

10

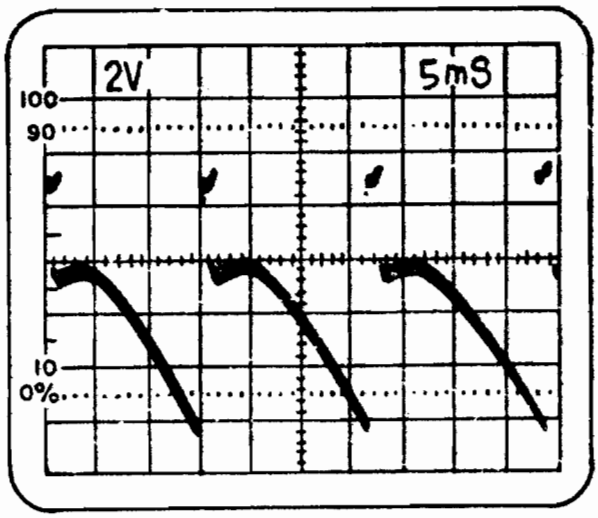

0

commodore		
PCB WAVEFORMS 9" CRT DISPLAY		
SIZE A	321447	REV A
SCALE NONE	SHEET 6 OF 10	

VERTICAL (3/3)

(11)

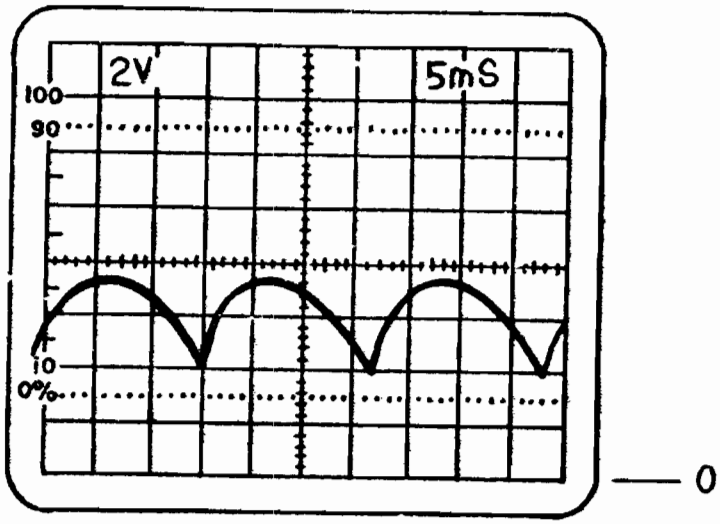

(12)

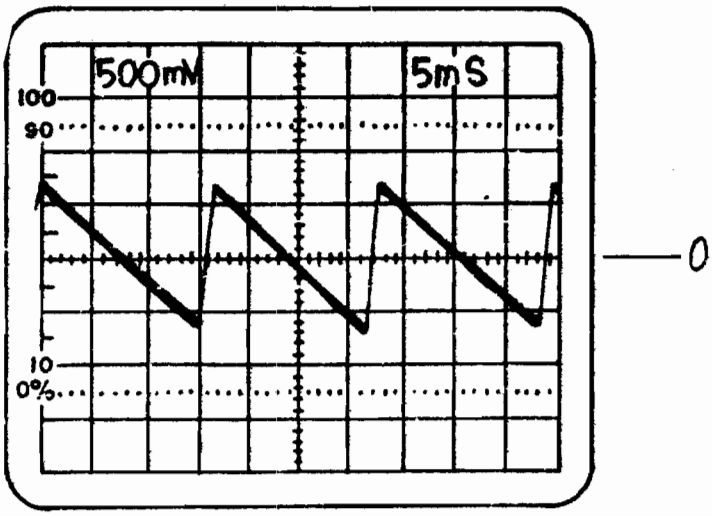

commodore		
PCB WAVEFORMS 9" CRT DISPLAY		
SIZE A	321447	REV A
SCALE NONE	SHEET 7 OF 10	

HORIZONTAL (1/2)

(13)

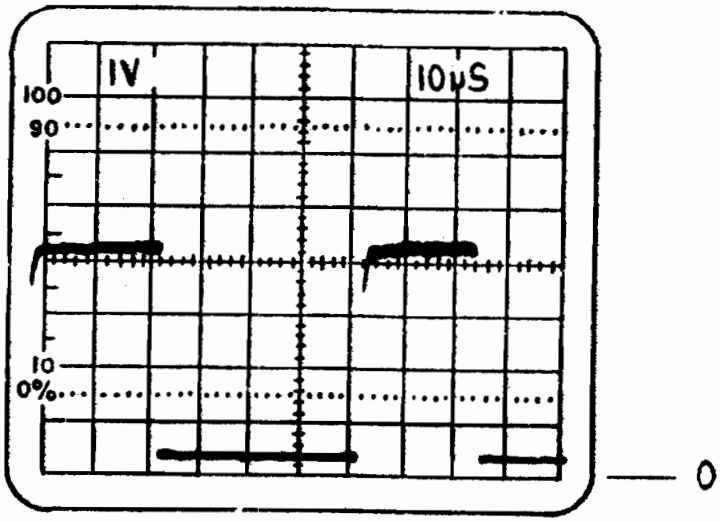

(14)

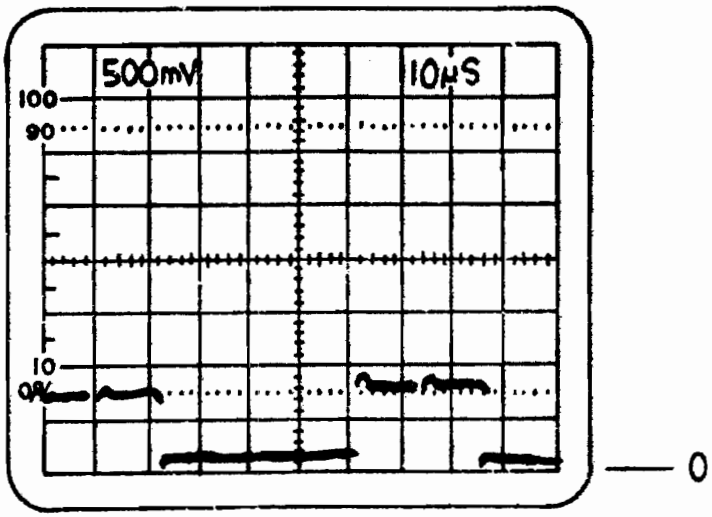

commodore		
PCB WAVEFORMS 9" CRT DISPLAY		
SIZE A	321447	REV A
SCALE NONE	SHEET 8 OF 10	

HORIZONTAL (1/2)

15

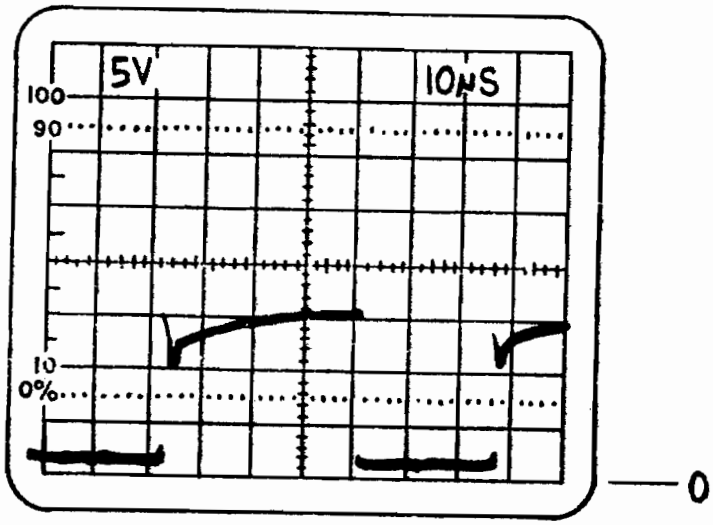

16

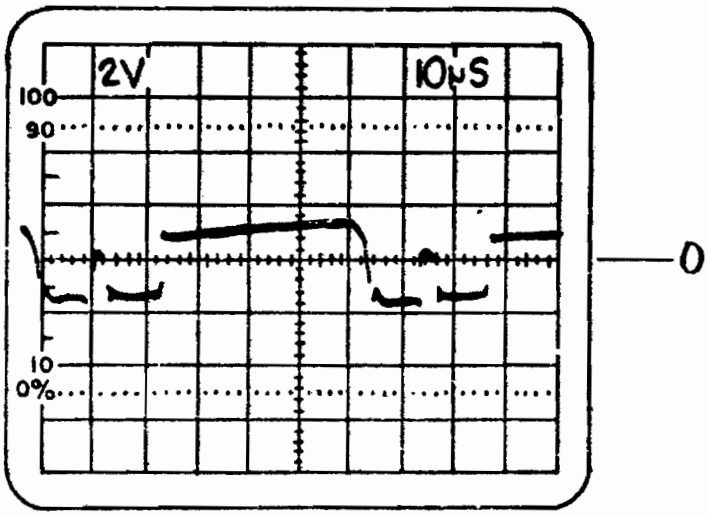

commodore		
PCB WAVEFORMS 9" CRT DISPLAY		
SIZE A	321447	REV A
SCALE NONE	SHEET 8 OF 10	

HORIZONTAL (1/2)

(17)

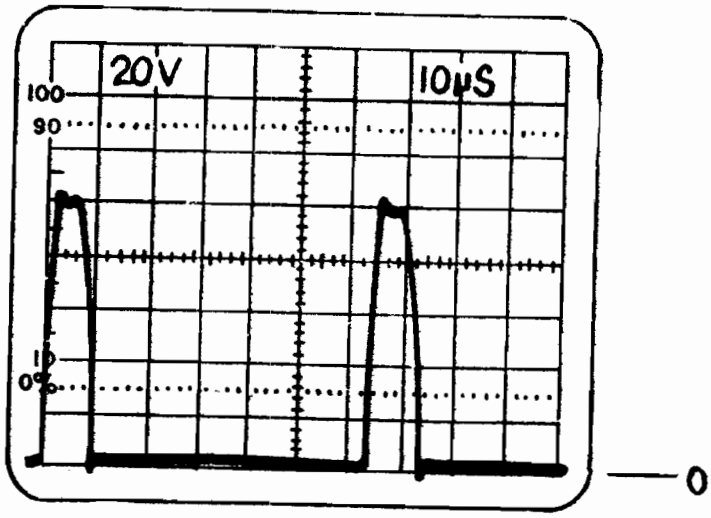

commodore		
PCB WAVEFORMS 9" CRT DISPLAY		
SIZE A	321447	REV A
SCALE NONE	SHEET 10 OF 10	

PART NO.	DESCRIPTION
320351-01	DYNAMIC PET P.C.B. ASSY, 16K GRAPHIC
-02	32K GRAPHIC
-03	16K BUSINESS
-04	32K BUSINESS
-05	DYNAMIC PET P.C.B. ASSY, 8K GRAPHIC
-06	DYNAMIC PET P.C.B. ASSY, WITH INTERNAL CASSETTE 8K GRAPHIC
-07	DYNAMIC PET P.C.B. ASSY, 16K GRAPHIC
-08	32K GRAPHIC
-09	16K BUSINESS
-10	32K BUSINESS
-11	DYNAMIC PET P.C.B. ASSY, 8K GRAPHIC
320351-12	DYNAMIC PET P.C.B. ASSY, WITH INTERNAL CASSETTE 8K GRAPHIC

REVISIONS

LTR	ZONE	DESCRIPTION	DATE	APPROVED
AG		REVISED & REDRAWN PER ECO 1850	9/29/80	
AH		REVISED PER ECO 1898	12/2/80	
AJ		REVISED PER ECO 1920	12/8/80	
AK		REVISED PER ECO 1928	12/8/80	
AL		REVISED PER ECO 2001	1/21/79	

7 IDENTIFY WITH COMMODORE PART NO. & APPLICABLE DASH NO. LOCATE APPROX AS SHOWN.

6 WHEN SHUNTS ARE OMITTED SUBSTITUTE JUMPER WIRE PREPARED PER DETAIL C, IN LOCATIONS SHOWN IN DETAIL A & D. THREE JUMPERS PER SH1 LOCATION, SIX JUMPERS PER SH2 LOCATION.

5 OMIT ON -05, -06, -11 & -12 CONFIGURATIONS ONLY.

4 ITEM 107 MAY BE SUBSTITUTED FOR ITEM 106; HOWEVER, PARTS SHALL NOT BE MIXED.

3. 54XXX, 54SXXX AND 54LSXXX MAY BE SUBSTITUTED FOR 74XXX, 74SXXX AND 74LSXXX.

2 USE BUSINESS ROM AT UD8.

1 USE GRAPHIC ROM AT UD8.

NOTES-UNLESS OTHERWISE SPECIFIED:

SHEET 6 OF 6 SIDE D ASSY DWG

commodore	TITLE DYNAMIC PET PC BOARD ASSY	DRAWN BY G CARROLL	DATE 1-16-79	ENGR D. GARLD	1-18-79	SIZE B	DRAWING NUMBER 320351
		CHKD B. SEILER		APPR T. IWATA	1-18-79		SHEET 1 OF 6

QUANTITY REQD PER PART / DASH NO. 12	11	10	09	08	07	06	05	04	03	02	01	ITEM	DS	PART NUMBER	DESCRIPTION	REF DES	BEND	NOTES
1	1	1	1	1	1	1	1	1	1	1	1	1	D	320350-01	P.C. BOARD DYNAMIC PET			
REF	REF	REF	REF	REF	REF	REF	REF	REF	REF	REF	REF	2	D	320349-01	LOGIC DIAGRAM			
1	1	1	1	1	1	1	1	1	1	1	1	3	B	901435-01	IC 6502 MPU	UC4		
2	2	2	2	2	2	2	2	2	2	2	2	4	B	901436-01	6520 PIA	UC6 UC7		
1	1	1	1	1	1	1	1	1	1	1	1	5	B	901437-01	6522 VIA	UC5		
2	2	2	2	2	2	2	2	2	2	2	2	6	B	901522-03	74177 BINARY PRESETABLE COUNT.	UF2, UF4		
1	1	1	1	1	1	1	1	1	1	1	1	7	B	901522-01	7417 HEX BUFFER	UA10		
1	1	1	1	1	1	1	1	1	1	1	1	8	B	901522-20	7425 NAND GATE	UB2		
1	1	1	1	1	1	1	1	1	1	1	1	10	B	901521-09	74LS145 BCD-TO DECIMAL DECODERS	UC9		
1	1	1	1	1	1	1	1	1	1	1	1	11	B	901522-21	74191 SYNC COUNTER	UG5		
1	1	1	1	1	1	1	1	1	1	1	1	12	B	901522-13	74154 4 TO 16 LINE DECODERS	UD2		
1	1	1	1	1	1	1	1	1	1	1	1	13	B	901522-04	7400 NAND GATE	UG10		
												14						
3	3	3	3	3	3	3	3	3	3	3	3	15	B	901525-09	74S74 FLIP-FLOP	UH1, UG8, UG9		ITEM 113 MAY BE USED AS A SUBSTITUTE
2	2	2	2	2	2	2	2	2	2	2	2	16	B	901525-01	74S04 SCHOTTKY HEX INV.	UI1, UH2		
1	1	1	1	1	1	1	1	1	1	1	1	17	B	901521-03	74LS08 AND GATE	UG1		ITEM 114 MAY BE USED AS A SUBSTITUTE
2	2	2	2	2	2	2	2	2	2	2	2	18	B	901521-01	74LS00 NAND GATE	UH4, UH5		
1	1	1	1	1	1	1	1	1	1	1	1	19	B	901521-02	74LS04 HEX INV.	UA3		
2	2	2	2	2	2	2	2	2	2	2	2	20	B	901521-03	74LS08 AND GATE	UH10, UF1, [illegible]		
2	2	2	2	2	2	2	2	2	2	2	2	21	B	901521-24	74LS10 NAND GATE	UA5, UG7		
2	2	2	2	2	2	2	2	2	2	2	2	22	B	901521-04	74LS20 NAND GATE	UG2, UG11		
2	2	2	2	2	2	2	2	2	2	2	2	23	B	901521-07	74LS93 COUNTER	UH9, UH11		
												24						
4	4	4	4	4	4	4	4	4	4	4	4	25	B	901521-08	74LS107 FLIP-FLOP	UG6, UH6		
																UH7, UH8		
4	4	4	4	4	4	4	4	4	4	4	4	26	B	901521-11	74LS157 DATA SEL	UF3, UF5		ITEM 111 MAY BE USED AS A SUBSTITUTE
																UF6, UH4		
1	1	1	1	1	1	1	1	1	1	1	1	27	B	901521-28	74LS164 8-BIT PARALLEL OUTPUT	UH3		ITEM 112 MAY BE USED AS A SUBSTITUTE
1	1	1	1	1	1	1	1	1	1	1	1	28	B	901521-12	74LS165 SHIFT REG.	UE11		
8	8	8	8	8	8	8	8	8	8	8	8	29	B	901521-13	74LS244 BUFFER	UB3, UC3		
																UE7, UE8		
																UE9, UE10		
																UI10, UI11		
4	4	4	4	4	4	4	4	4	4	4	4	30	B	901522-26	74153 DATA SELECTOR, MULTIPLEX.	UE3-UE6		
2	2	2	2	2	2	2	2	2	2	2	2	31	B	901521-29	IC 74LS373 OCTAL D-TYPE LATCH	UF9, UG3		

commodore

TITLE: DYNAMIC PET P.C. BOARD ASSEMBLY

DRAWN BY: | DATE | ENGR: | DATE | CHKD: | APPR:

SIZE B | 320351 | REV A1 | SHT 2/6

QUANTITY REQD PER PART / DASH NO. 12	11	10	09	08	07	06	05	04	03	02	01	ITEM	DS	PART NUMBER	DESCRIPTION	REF DES	BEND	NOTES
2	2	2	2	2	2	2	2	2	2	2	2	32	B	901453-02	IC RAM 4K STATIC	UF7, UF8		400 NSEC
-	-	8	8	8	8	-	-	8	8	8	8	33	B	901470-01	4116 RAM 16K DYNAMIC	UI2-UI9		SEE ITEM 108 OR 109 FOR SUBSTITUTE
-	-	8	-	8	-	-	-	8	-	8	-	33	B	901470-01	4116 RAM 16K DYNAMIC	UJ2-UJ9		
1	1	1	1	1	1	1	1	1	1	1	1	34	B	901447-10	6316-004 ROM (CHAR. GEN.)	UF10		
-	-	-	-	-	-	1	1	-	-	1	1	35	B	901447-24	6316-011 ROM (E000-E7EE)	UD5		1
-	-	-	-	-	-	1	1	1	1	1	1	36	B	901465-01	6332-007 ROM (C000-CFFF)	UD6		
-	-	-	-	-	-	1	1	1	1	1	1	37	B	901465-02	6332-008 ROM (D000-DFFF)	UD7		
-	-	-	-	-	-	1	1	1	1	1	1	38	B	901465-03	6332-009 ROM (F000-FFFF)	UD9		
-	-	-	-	-	-	-	-	1	1	-	-	39	B	901474-01	6316-024 ROM CHAR. GEN.	UD8		2
1	1	1	1	1	1	1	1	1	1	1	1	40	B	901523-01	LM555 TIMER	UA2		
3	3	3	3	3	3	3	3	3	3	3	3	41	B	901524-01	IC MC 3446 INTFC BUS	UA7-UA9		
												42						
3	3	3	3	3	3	3	3	3	3	3	3	43	B	900010-38	CAPACITOR CERAMIC 0.01UF 50V	C66,69,70		
2	2	2	2	2	2	2	2	2	2	2	2	44	B	900010-37	CERAMIC 0.02UF 200V	C64,65		
1	1	1	1	1	1	1	1	1	1	1	1	45	B	900150-07	POLY. FILM 0.1UF 100V	C68		
1	1	1	1	1	1	1	1	1	1	1	1	46	B	900010-42	CERAMIC 22PF 200V	C44		
1	1	1	1	1	1	1	1	1	1	1	1	47	B	900101-38	ELECT. 470UF 16V	C63		
3	3	3	3	3	3	3	3	3	3	3	3	48	B	900100-33	ELECT. 47UF 16V	C14,16,24		
1	1	1	1	1	1	1	1	1	1	1	1	49	B	900101-40	ELECT. 4700UF 25V	C62		
51	51	67	67	67	67	51	51	67	67	67	67	50	B	900020-01	DIPPED CERAMIC 0.1UF 50V	C1-C13		5 SEE SH 6 ASSY DRAWING
																C18-C23		
																C26-C31		
																C33-C40		
																C47-C61		
																C71-C80		
																C85-C93		
4	4	4	4	4	4	4	4	4	4	4	4	51	B	900402-13	TANT. 1.0UF 25V	C15,17,25,67		
9	9	9	9	9	9	9	9	9	9	9	9	52	B	900108-31	CAPACITOR, ELEC. LOW LEAKAGE 10UF 25V	C32,41,42,		SEE ITEM 99 FOR SUBSTITUTE
																C43,C45,		
																C81-C84		
4	4	4	4	4	4	4	4	4	4	4	4	53	B	900750-01	DIODE 1N4001 1A/50V	CR10-13		SEE ITEM 56 FOR SUBSTITUTE
9	9	9	9	9	9	9	9	9	9	9	9	54	B	900753-01	1N5402 3A/200V	CR1-9		
2	2	2	2	2	2	2	2	2	2	2	2	55	B	900941-01	ZENER 7.5	VR1,2		
5	5	5	5	5	5	5	5	5	5	5	5	56	B	900750-05	DIODE 1N4005	CR10-13		SUBSTITUTE FOR ITEM 53
2	2	2	2	2	2	2	2	2	2	2	2	57	B	901550-69	RESISTOR 1/4W 5% 1.5K OHMS	R1, R4		
10	10	10	10	10	10	10	10	10	10	10	10	58	B	901550-20	" " 10K OHMS	R2 R6		
																R18-R25		

commodore

TITLE: DYNAMIC PET P.C. BOARD ASSEMBLY

DRWN BY: DATE: ENGR: DATE: SIZE B 320351 REV A SHT 3/6

CHKD: APPR:

QUANTITY REQD PER PART / DASH NO. 12	11	10	09	08	07	06	05	04	03	02	01	ITEM	DS	PART NUMBER	DESCRIPTION	REF DES	BEND	NOTES
14	14	14	14	14	14	14	14	14	14	14	14	59	B	901550-01	RESISTOR 1/4 W 5% 1K OHMS	R3, R5, R12-R14, R27, R40, R43-R46, R49-R51		
2	2	2	2	2	2	2	2	2	2	2	2	60	B	901550-84	1M	R15, R16		
2	2	2	2	2	2	2	2	2	2	2	2	61	B	901550-85	2.4K	R10, R48		
												62						
2	2	2	2	2	2	2	2	2	2	2	2	63	B	901550-90	27	R41, R42		
1	1	1	1	1	1	1	1	1	1	1	1	64	B	901550-02	3.3K	R17		
1	1	1	1	1	1	1	1	1	1	1	1	65	B	901550-93	39	R39		
4	4	4	4	4	4	4	4	4	4	4	4	66	B	901550-38	470	R26, R28, R29, R30		
8	8	8	8	8	8	8	8	8	8	8	8	67	B	901550-94	68	R31-R38		
2	2	2	2	2	2	2	2	2	2	2	2	68	B	901550-03	5.1K	R11, R47		
2	2	2	2	2	2	2	2	2	2	2	2	69	B	901550-76	RESISTOR 1/4 W 5% 270 OHMS	R7, R8		
2	2	2	2	2	2	2	2	2	2	2	2	70	B	902658-01	TRANSISTOR NPN 2N3904	Q3, Q6		
2	2	2	2	2	2	2	2	2	2	2	2	71	B	902652-01	" NPN 2N4401	Q2, Q5		
2	2	2	2	2	2	2	2	2	2	2	2	72	B	902653-01	TRANSISTOR NPN TIP29	Q1, Q4		
												73						
1	1	1	1	1	1	1	1	1	1	1	1	74	B	901528-04	VOLT. REG. 7812 +12V / 1A-TO-3	VR5		
1	1	1	1	1	1	1	1	1	1	1	1	75	B	901527-03	" " 7905 -5V / 1A-TO-220	VR6		
2	2	2	2	2	2	2	2	2	2	2	2	76	B	901528-03	VOLT. REG. LM 340-5 +5V 1.5A TO-3	VR3, VR4		FOR SUBSTITUTE SEE ITEM 77
S	S	S	S	S	S	S	S	S	S	S	S	77	B	901528-01	VOLT. REG. LM 323	VR3, VR4		SUBSTITUTE FOR ITEM 76
1	1	1	1	1	1	1	1	1	1	1	1	78	B	904777-10	DIP SHUNT 10 PACK	SH2		6
1	1	1	1	1	1	1	1	1	1	1	1	79	B	904777-06	DIP SHUNT 6 PACK	SH1		6
S	S	S	S	S	S	S	S	S	S	S	S	80	B	320086-02	JUMPER	SH1, SH2		6
1	1	1	1	1	1	1	1	1	1	1	1	81	B	903331-20	HEADER ASSY. POLARIZED. (.100) 20 PIN	J5		SEE ITEM 117 FOR SUBSTITUTE
1	1	1	1	1	1	1	1	1	1	1	1	82	B	903331-07	POLARIZED, (.100) 7 PIN	J11		SEE ITEM 118 FOR SUB. PIN 2 OMITTED, REMOVE PIN 3 AT ASSY
1	1	1	1	1	1	1	1	1	1	1	1	83	B	903326-07	(.100) 7 PIN	J10		SEE ITEM 119 FOR SUB. REMOVE PIN 3 AT ASSY
1	1	1	1	1	1	1	1	1	1	1	1	84	B	903331-07	POLARIZED. (.100) 7 PIN	J7		SEE ITEM 120 FOR SUB. ORIENT OMITTED PIN TO PIN 6 POSITION
1	1	1	1	1	1	1	1	1	1	1	1	85	B	903316-09	HEADER ASSY (.156) 9 PIN	J8		SEE ITEM 121 FOR SUB. REMOVE PIN 7 AT ASSY
2	2	2	2	2	2	2	2	2	2	2	2	86	B	903345-25	HEADER ASSY, POST, STRAIGHT DUAL ROW .100 CENTERS	J4, J9		50 PIN
												87						
												88						
4	4	4	4	4	4	8	8	8	8	8	8	89	B	904150-04	IC SOCKET 24 PIN	UD3-UD9, UF10		SEE ITEM 90 FOR SUBSTITUTE
S	S	S	S	S	S	S	S	S	S	S	S	90	B	904153-04	IC SOCKET 24 PIN	UD3-UD9, UF10		SUBSTITUTE FOR ITEM 89

commodore	TITLE: DYNAMIC PET P.C. BOARD ASSEMBLY	DRWN BY:	ENGR:	DATE	SIZE B	320351	REV A	SHT 1/6
		CHKD:	APPR:					

QUANTITY REQD PER PART / DASH NO. 12	11	10	09	08	07	06	05	04	03	02	01	ITEM	DS	PART NUMBER	DESCRIPTION	REF DES	BEND	NOTES
1	1	1	1	1	1	1	1	1	1	1	1	91	B	904150-06	IC SOCKET 40 PIN	UC4		
1	-	-	-	-	-	1	-	-	-	-	-	92	C	320268-02	HEAT SINK			
-	1	1	1	1	1	-	1	1	1	1	1	93	C	320268-01	HEAT SINK			
A/R	A/R	A/R	A/R	A/R	A/R	A/R	A/R	A/R	A/R	A/R	A/R	94	B	904907-01	HEAT SINK COMPOUND THER.			
												95						
6	6	6	6	6	6	6	6	6	6	6	6	96	B	906403-19	RIVET-DOME HEAD, OPEN END			
3	3	3	3	3	3	3	3	3	3	3	3	97	B	906404-04	RIVET-DOME HEAD, CLOSED END			
												98						
5	5	5	5	5	5	8	8	8	8	8	8	99	B	900402-09	CAP. TANTULUM 10µF 20V	C32,41,42,43, C45,C81-C84		SUBSTITUTE FOR ITEM 52
												100						
1	1	1	1	1	1	1	1	1	1	1	1	101	B	905051-01	CABLE TIE			
												102						
1	1	1	1	1	1	1	1	1	1	1	1	103	B	900556-02	CRYSTAL 16MHZ.	Y1		SEE ITEM 104 FOR SUBSTITUTE
5	5	5	5	5	5	5	5	5	5	5	5	104	B	900557-01	CRYSTAL 16 MHZ.	Y1		SUBSTITUTE FOR ITEM 103
												105						
8	8	-	-	-	-	8	8	-	-	-	-	106	B	901470-02	IC 8K DYNAMIC RAM 4108-30 MOSTEK	U12-U19		8 DEVICES USED FOR 8K VERSION [4]
5	5	-	-	-	-	5	5	-	-	-	-	107	B	901470-03	IC 8K DYNAMIC RAM 4108-31 MOSTEK	U12-U19		8 DEVICES USED FOR 8K VERSION [4]
-	-	-	5	-	5	-	-	-	5	-	5	108	B	901470-02	IC 8K DYNAMIC RAM 4108-30 MOSTEK	U12-U19 UJ2-UJ9		16 DEVICES USED FOR 16K VERSION FOR ITEM 33
-	-	-	5	-	5	-	-	-	5	-	5	109	B	901470-03	IC 8K DYNAMIC RAM 4108-31 MOSTEK	U12-U19 UJ2-UJ9		16 DEVICES USED FOR 16K VERSION FOR ITEM 33
												110						
5	5	5	5	5	5	5	5	5	5	5	5	111	B	901522-23	74157 DATA SEL.			MAY BE USED AS A SUBSTITUTE FOR ITEM 26
5	5	5	5	5	5	5	5	5	5	5	5	112	B	901522-27	74164 8-BIT PARALLEL OUTPUT			" " " " " " " ITEM 27
5	5	5	5	5	5	5	5	5	5	5	5	113	B	901522-22	7474 FLIP FLOP	UH1, UG8, UG9		" " " " " " " ITEM 15
5	5	5	5	5	5	5	5	5	5	5	5	114	B	901525-05	7430B AND GATE	UG1		" " " " " " " ITEM 17
1	1	1	1	1	1	-	-	-	-	-	-	115	B	901465-23	6332-120 ROM (B000-BFFF)	UD5		
1	1	1	1	1	1	-	-	-	-	-	-	116	B	901465-20	6332-059F ROM (C000-CFFF)	UD6		
5	5	5	5	5	5	5	5	5	5	5	5	117	B	903335-20	HEADER ASSY, POLARIZED, (.100), 20 PIN	J5		SUBSTITUTE FOR ITEM 81
5	5	5	5	5	5	5	5	5	5	5	5	118	B	903335-67	↑ ↑ , POLARIZED, (.100), 7 PIN	J11		SUBSTITUTE FOR ITEM 82
5	5	5	5	5	5	5	5	5	5	5	5	119	B	903335-37	, POLARIZED, (.100) 7 PIN	J10		SUBSTITUTE FOR ITEM 83
5	5	5	5	5	5	5	5	5	5	5	5	120	B	903335-07	↓ ↓ , POLARIZED, (.100) 7 PIN	J7		SUB. FOR ITEM 84, ORIENT OMITTED PIN TO PIN 6 POSITION
5	5	5	5	5	5	5	5	5	5	5	5	121	B	903337-09	HEADER ASSY, (.156) 9 PIN	J8		SUB. FOR ITEM 85. REMOVE PIN 7 AT ASSY
1	1	1	1	1	1	-	-	-	-	-	-	122	B	901465-21	6332-096 ROM (D000-DFFF)	UD7		
1	1	-	-	1	1	-	-	-	-	-	-	123	B	901447-29	6316-034 ROM (E000-E7FF)	UD8		[1]
6	-	-	-	-	-	6	-	-	-	-	-	124	B	320176-01	JUMPER WIRE (22 AWG)			
												125						
-	-	1	1	-	-	-	-	-	-	-	-	126	B	901474-02	6316-035 ROM	UD8		[2]
1	1	1	1	1	1	-	-	-	-	-	-	127	B	901465-22	6332-075 ROM (F000-FFFF)	UD9		

commodore

TITLE: DYNAMIC PET P.C. BOARD ASSEMBLY

DRAWN BY: | CHKD: | ENGR: | APPD: | DATE | SIZE D | 320351 | REV ALL | SHT 5/6

REVISIONS				
LTR	ZONE	DESCRIPTION	DATE	APPROVED
		SEE SHEET 1		

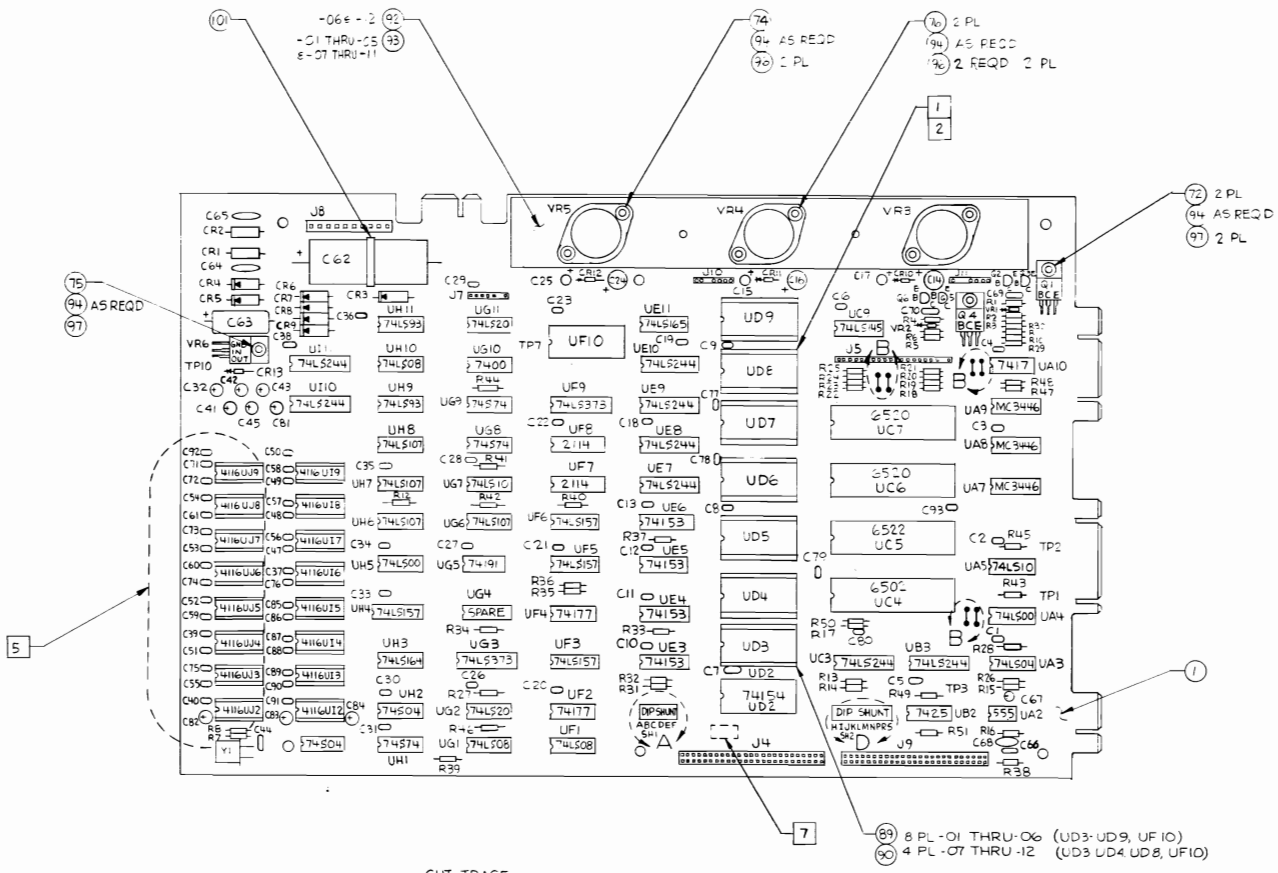

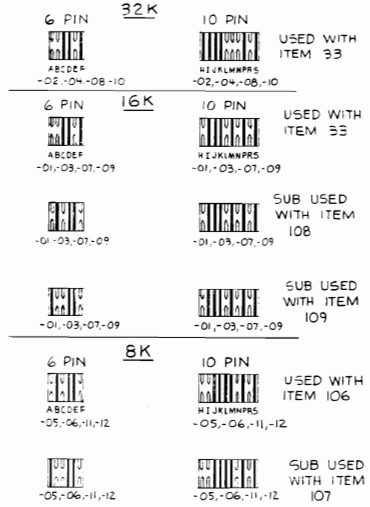

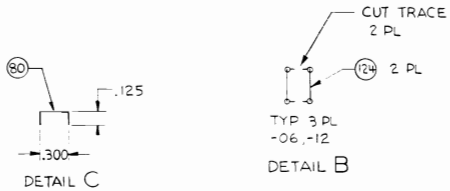

UNLESS OTHERWISE SPECIFIED TOLERANCES ON DECIMALS	DRAWN BY G. CARROLL	DATE 1-16-79	commodore
	CHKD		DYNAMIC PET P.C. BOARD ASSY
	ENGR		
	APPR		
MATERIAL	USED ON DYNAMIC PET	NEXT ASSY 320293 320465	SIZE D 320351 REV AL
FINISH			SCALE FULL SHEET 6 OF 6

ADVANCED REPRO

/15987-2

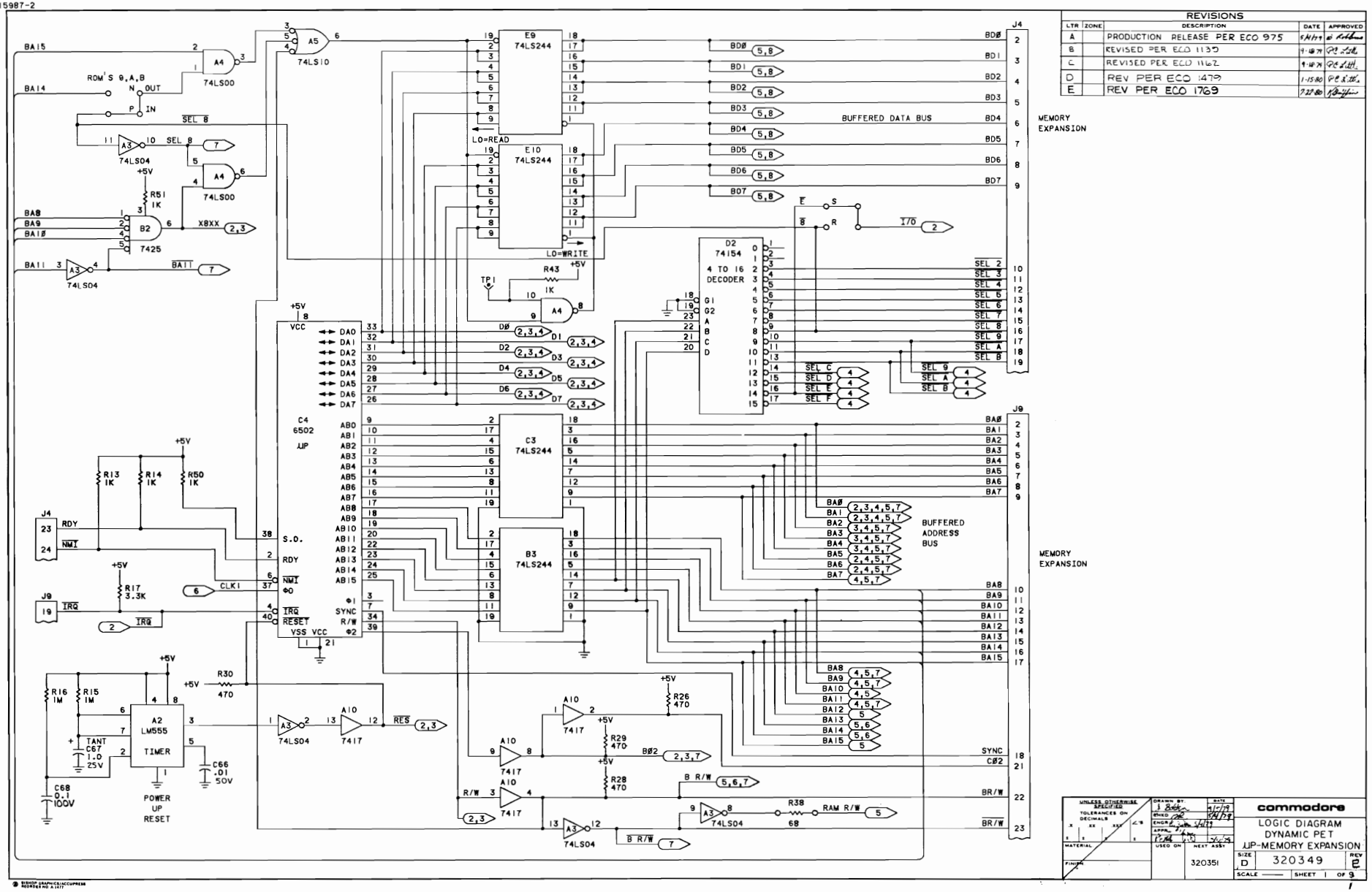

REVISIONS				
LTR	ZONE	DESCRIPTION	DATE	APPROVED
A		PRODUCTION RELEASE PER ECO 975	5-14-79	
B		REVISED PER ECO 1139	9-18-79	
C		REVISED PER ECO 1162	9-18-79	
D		REV PER ECO 1479	1-15-80	
E		REV PER ECO 1769	7-22-80	

UNLESS OTHERWISE SPECIFIED TOLERANCES ON DECIMALS

MATERIAL

FINISH

DRAWN BY J. Bickle 1/16/79
CHKD 1/16/79
ENGR
APPR
USED ON
NEXT ASSY 320351

commodore

LOGIC DIAGRAM
DYNAMIC PET
UP-MEMORY EXPANSION

SIZE D 320349 REV E

SCALE — SHEET 1 OF 9

BISHOP GRAPHICS/ACCUPRESS REORDER NO. A 1417

/15986-2

REVISIONS				
LTR	ZONE	DESCRIPTION	DATE	APPROVED
		SEE SHEET 1		

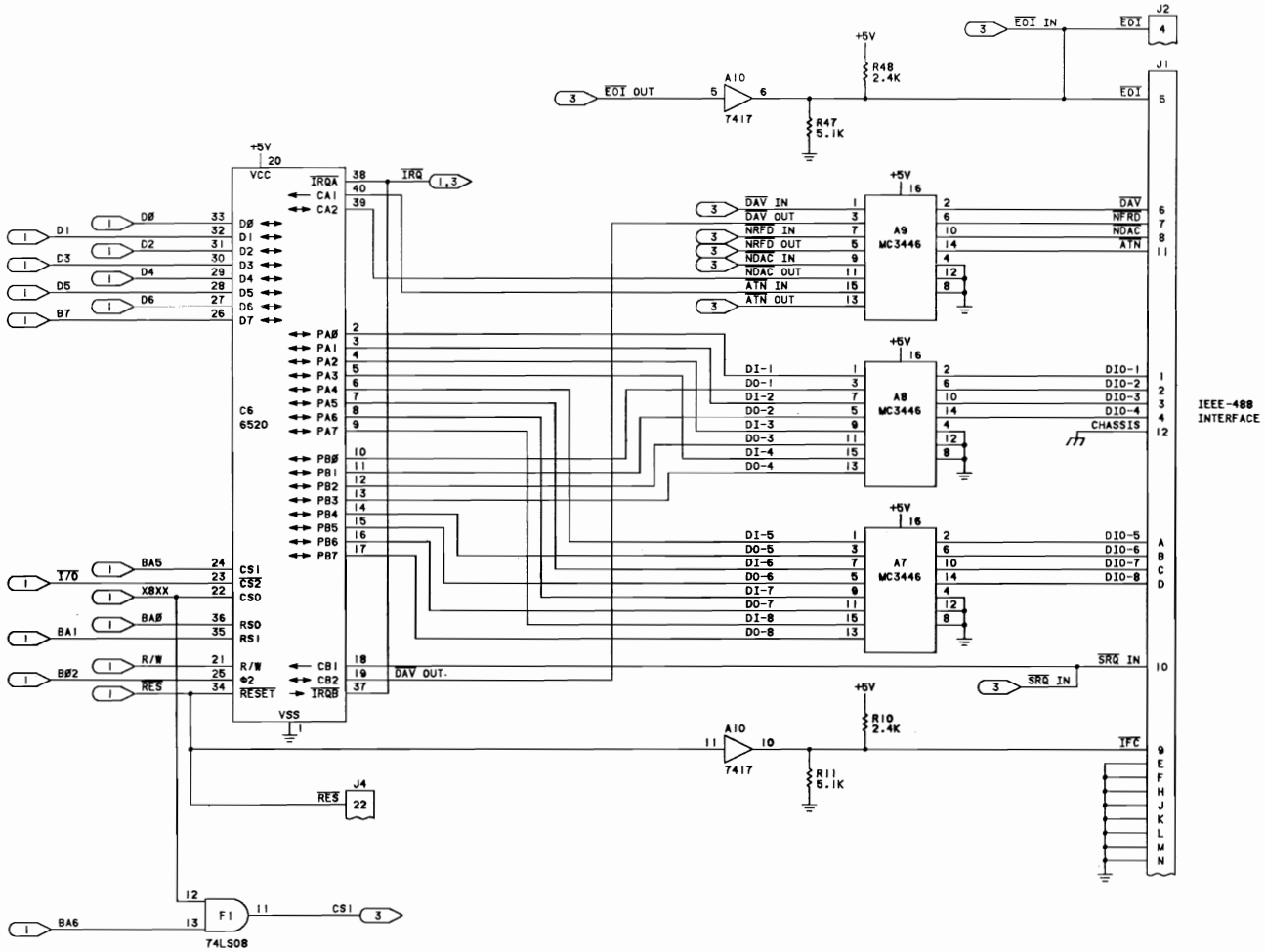

UNLESS OTHERWISE SPECIFIED TOLERANCES ON DECIMALS	DRAWN BY:	DATE	commodore
	CHKD.		LOGIC DIAGRAM DYNAMIC PET IEEE-488 INTERFACE
	ENGR.		
	APPR.		
MATERIAL	USED ON	NEXT ASSY	SIZE D 320349 REV E
FINISH:			SCALE — SHEET 2 OF 9

© BISHOP GRAPHICS/ACCUPRESS
RED ROCK NO. A 1577

/16117-2

REVISIONS				
LTR	ZONE	DESCRIPTION	DATE	APPROVED
		SEE SHEET 1		

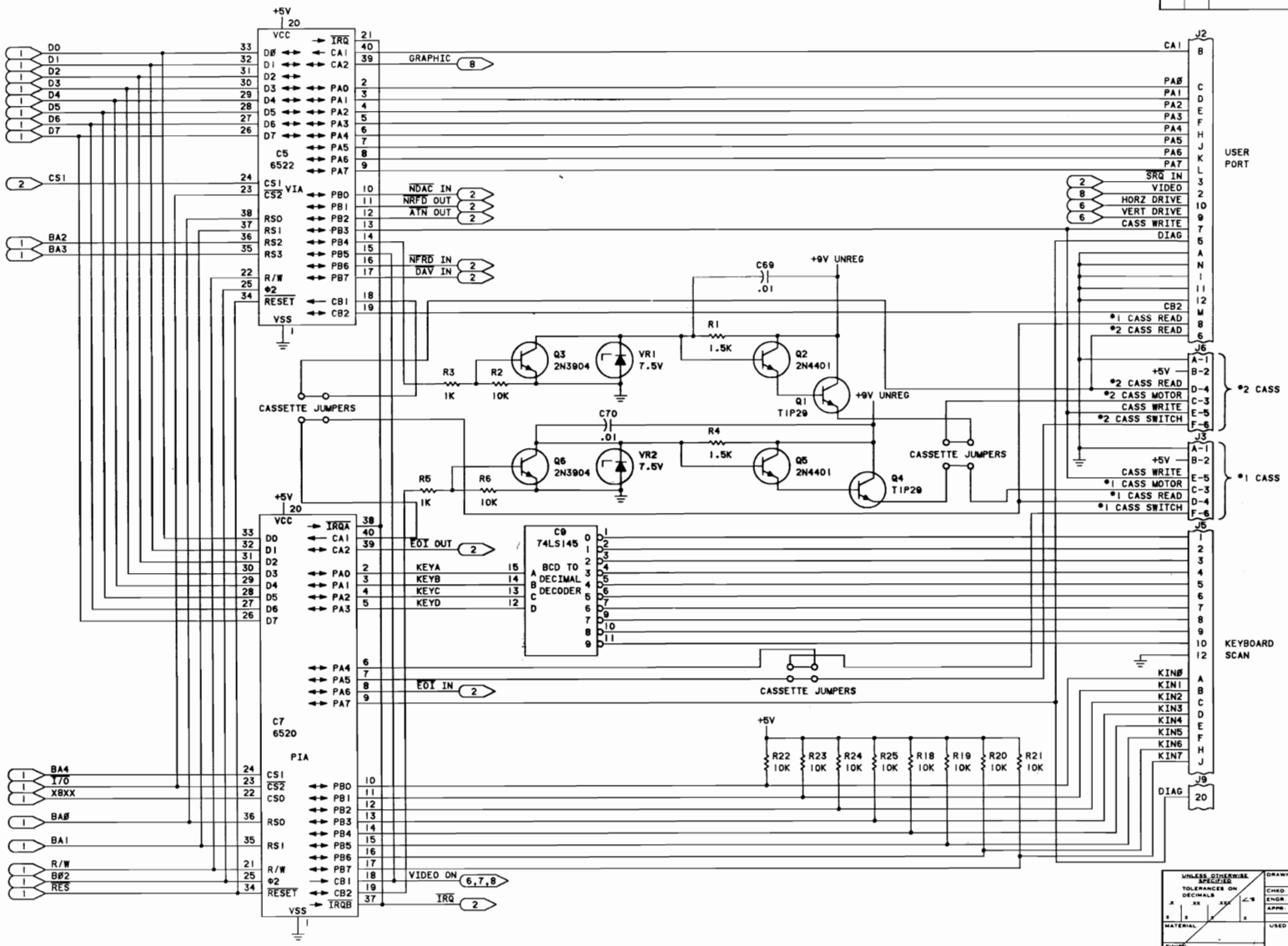

UNLESS OTHERWISE SPECIFIED TOLERANCES ON DECIMALS .X ±.1 .XX ±.03 .XXX ±.010 ∠ ±1°	DRAWN BY:	DATE	commodore
	CHKD		LOGIC DIAGRAM DYNAMIC PET CASSETTE & KEYBOARD
	ENGR		
	APPR		
MATERIAL	USED ON	NEXT ASSY	SIZE D 320349 REV E
FINISH			SCALE — SHEET 3 OF 9

BANGOR GRAPHICS/ACCUPRESS REORDER NO. A 1077

/16050-2

REVISIONS				
LTR	ZONE	DESCRIPTION	DATE	APPROVED
		SEE SHEET 1		

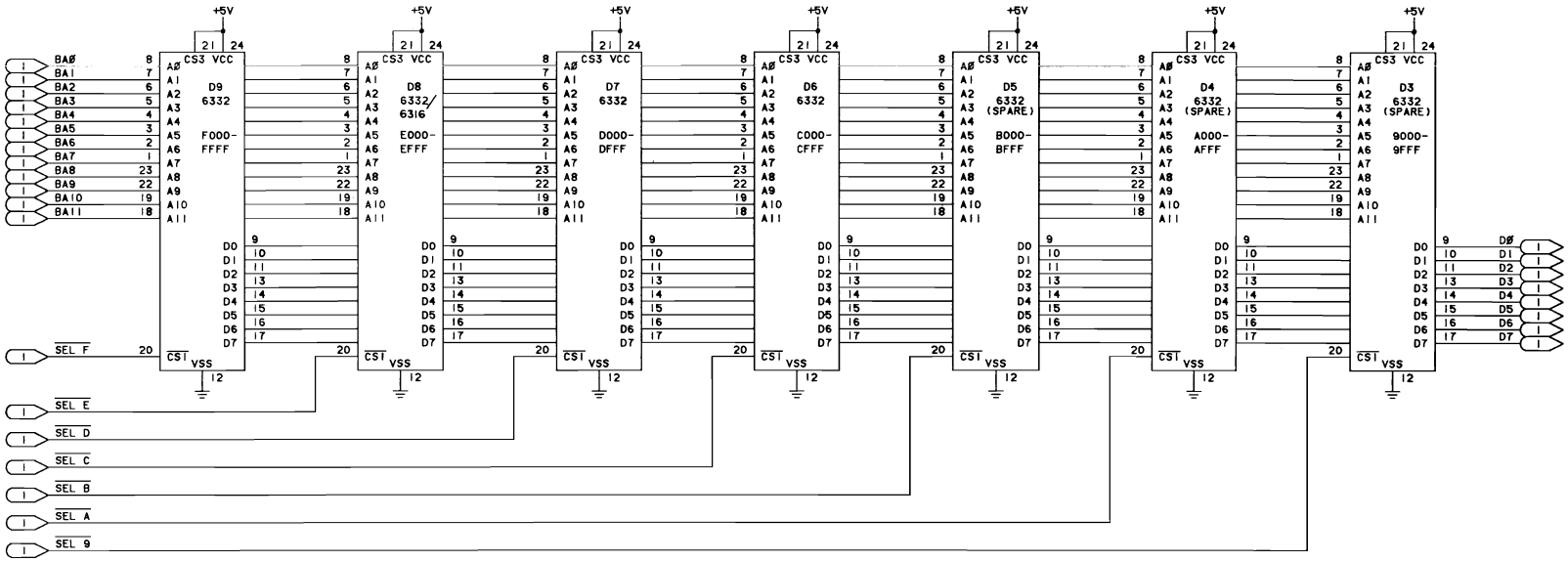

UNLESS OTHERWISE SPECIFIED TOLERANCES ON DECIMALS .X ±.5 .XX ±.25 .XXX ±.13 ∠ ±5

MATERIAL

FINISH

DRAWN BY: DATE

CHKD

ENGR

APPR

USED ON NEXT ASSY

commodore

LOGIC DIAGRAM
DYNAMIC PET
ROMS

SIZE D 320349 REV E

SCALE —— SHEET 4 OF 9

® BISHOP GRAPHICS ACCUPRESS REORDER NO. A 1217

/15991-2

REVISIONS				
LTR	ZONE	DESCRIPTION	DATE	APPROVED
		SEE SHEET 1		

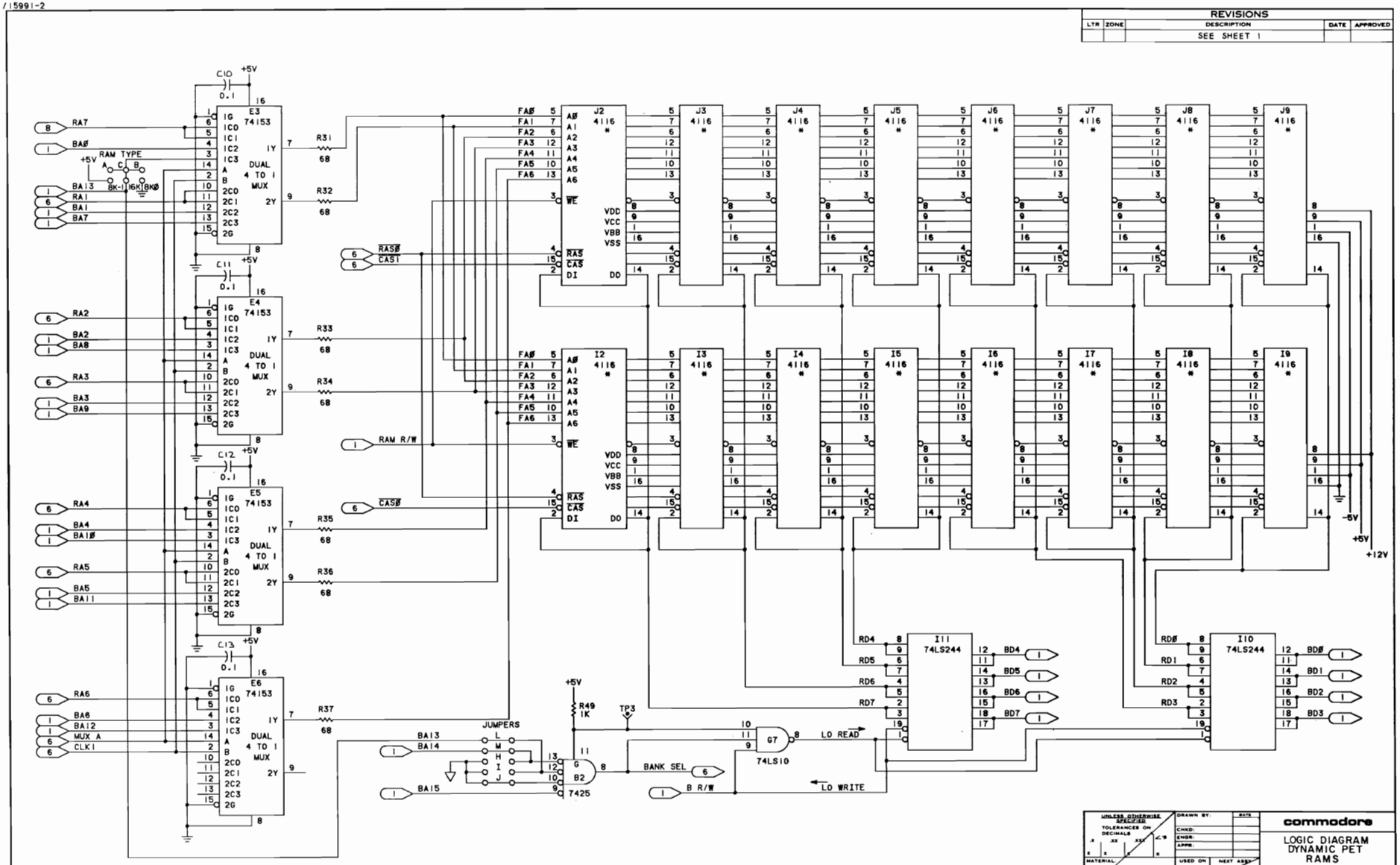

NOTE: ALL CIRCUITS MARKED * ARE FOR 32K MACHINE ONLY

UNLESS OTHERWISE SPECIFIED TOLERANCES ON DECIMALS .X ±.1 .XX ±.03 .XXX ±.8

DRAWN BY: DATE
CHKD:
ENGR:
APPR:
MATERIAL
FINISH:
USED ON NEXT ASSY

commodore

LOGIC DIAGRAM
DYNAMIC PET
RAMS

SIZE D 320349 REV E

SCALE — SHEET 5 OF 9

15988-2

REVISIONS				
LTR	ZONE	DESCRIPTION	DATE	APPROVED
		SEE SHEET 1		

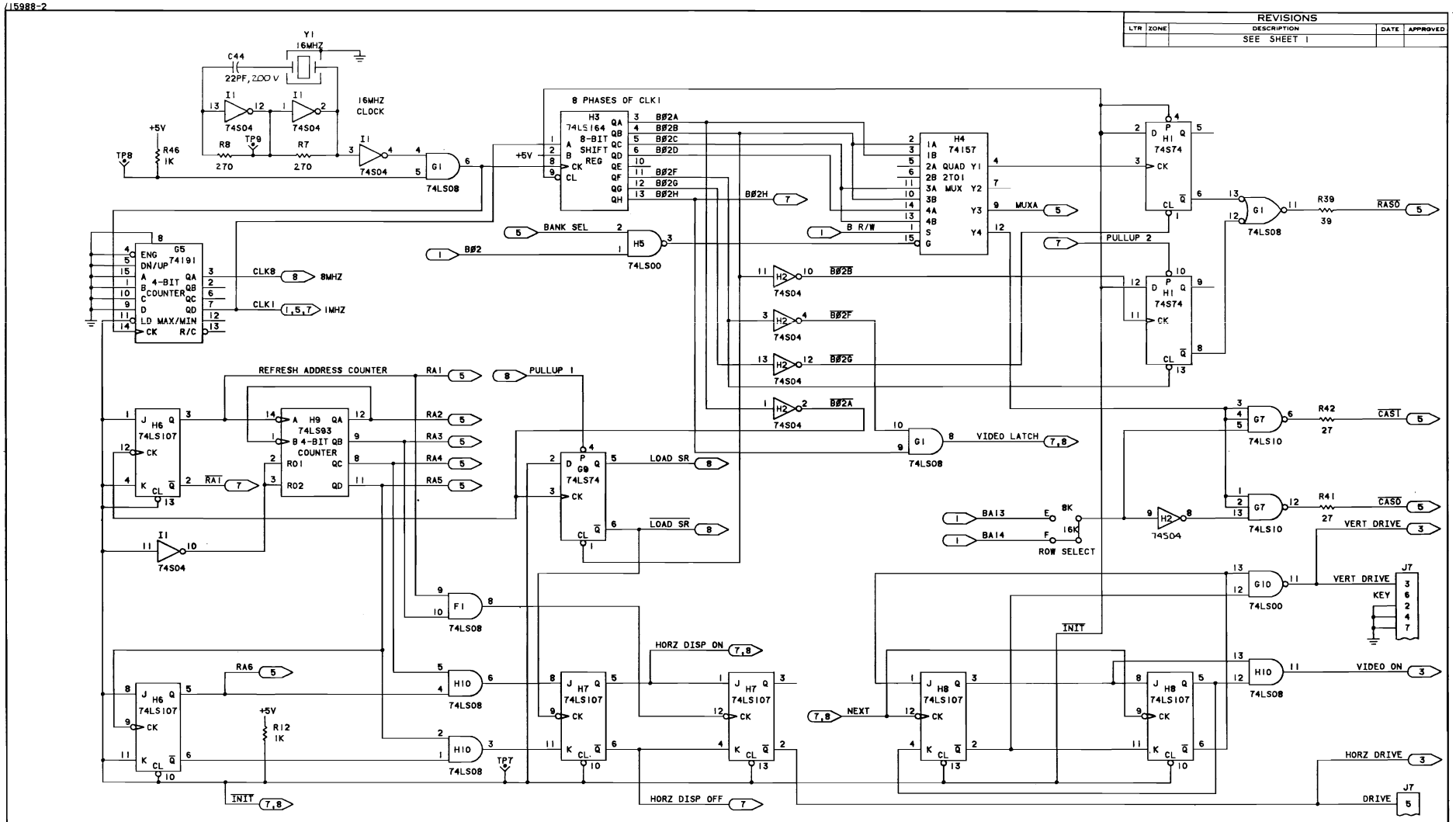

UNLESS OTHERWISE SPECIFIED TOLERANCES ON DECIMALS	DRAWN BY:	DATE	commodore
MATERIAL:	CHKD:		LOGIC DIAGRAM DYNAMIC PET MASTER TIMING
FINISH:	ENGR:		SIZE D 320349 REV E
	APPR:		SCALE — SHEET 6 OF 9
	USED ON	NEXT ASSY	

© BISHOP GRAPHICS/ACCUPRESS REORDER NO. A-3377

/15989-2

REVISIONS				
LTR	ZONE	DESCRIPTION	DATE	APPROVED
		SEE SHEET 1		

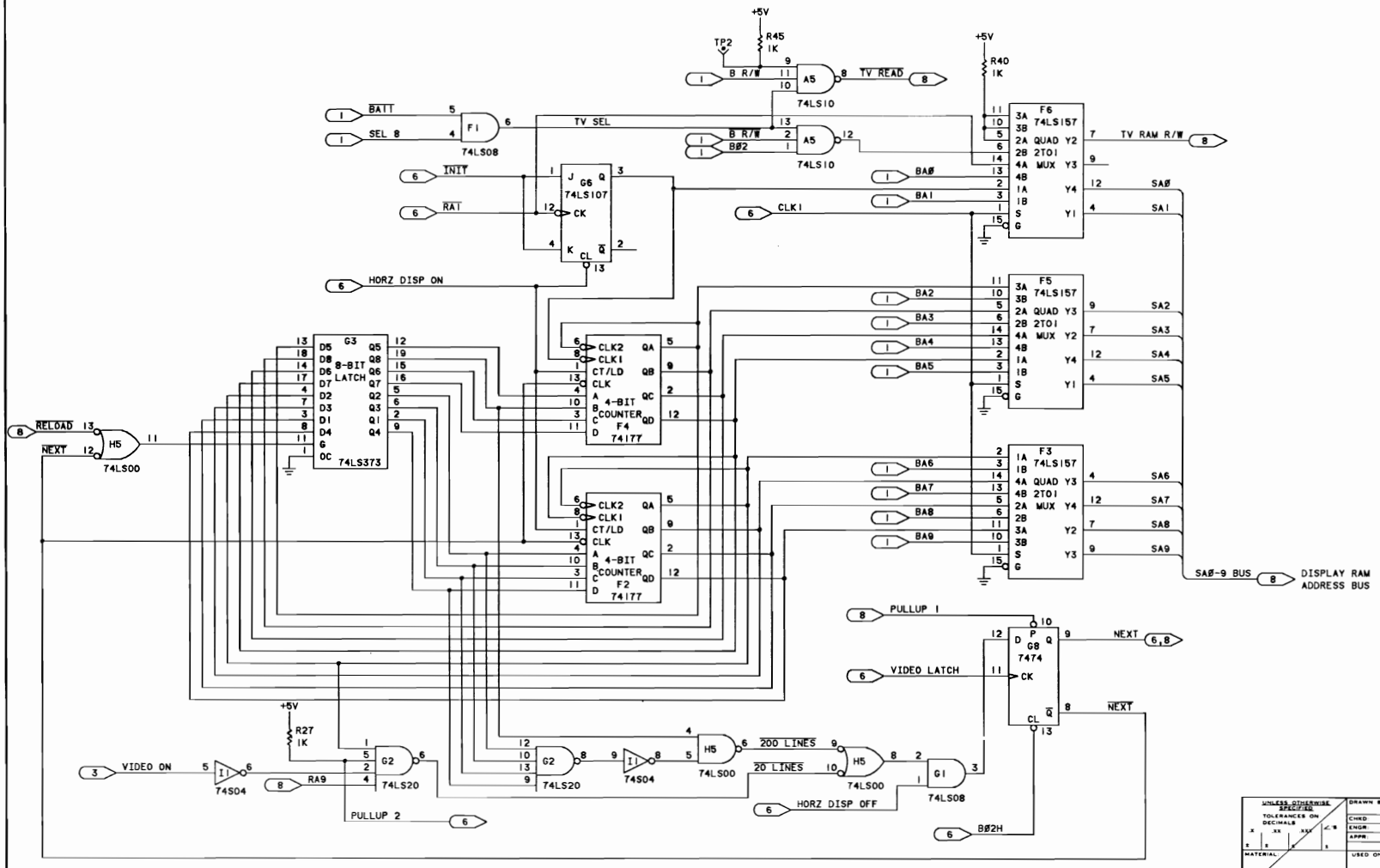

UNLESS OTHERWISE SPECIFIED TOLERANCES ON DECIMALS .X ±.1 .XX ±.05 .XXX ±.005 ∠ ±1°

MATERIAL:

FINISH:

DRAWN BY: DATE

CHKD:

ENGR:

APPR:

USED ON NEXT ASSY

commodore

LOGIC DIAGRAM
DYNAMIC PET
DISPLAY LOGIC

SIZE D 320349 REV E

SCALE — SHEET 7 OF 9

© BANDP GRAPHICS/ACCUPRESS REORDER NO. A 1577

'15990-2

REVISIONS				
LTR	ZONE	DESCRIPTION	DATE	APPROVED
		SEE SHEET 1		

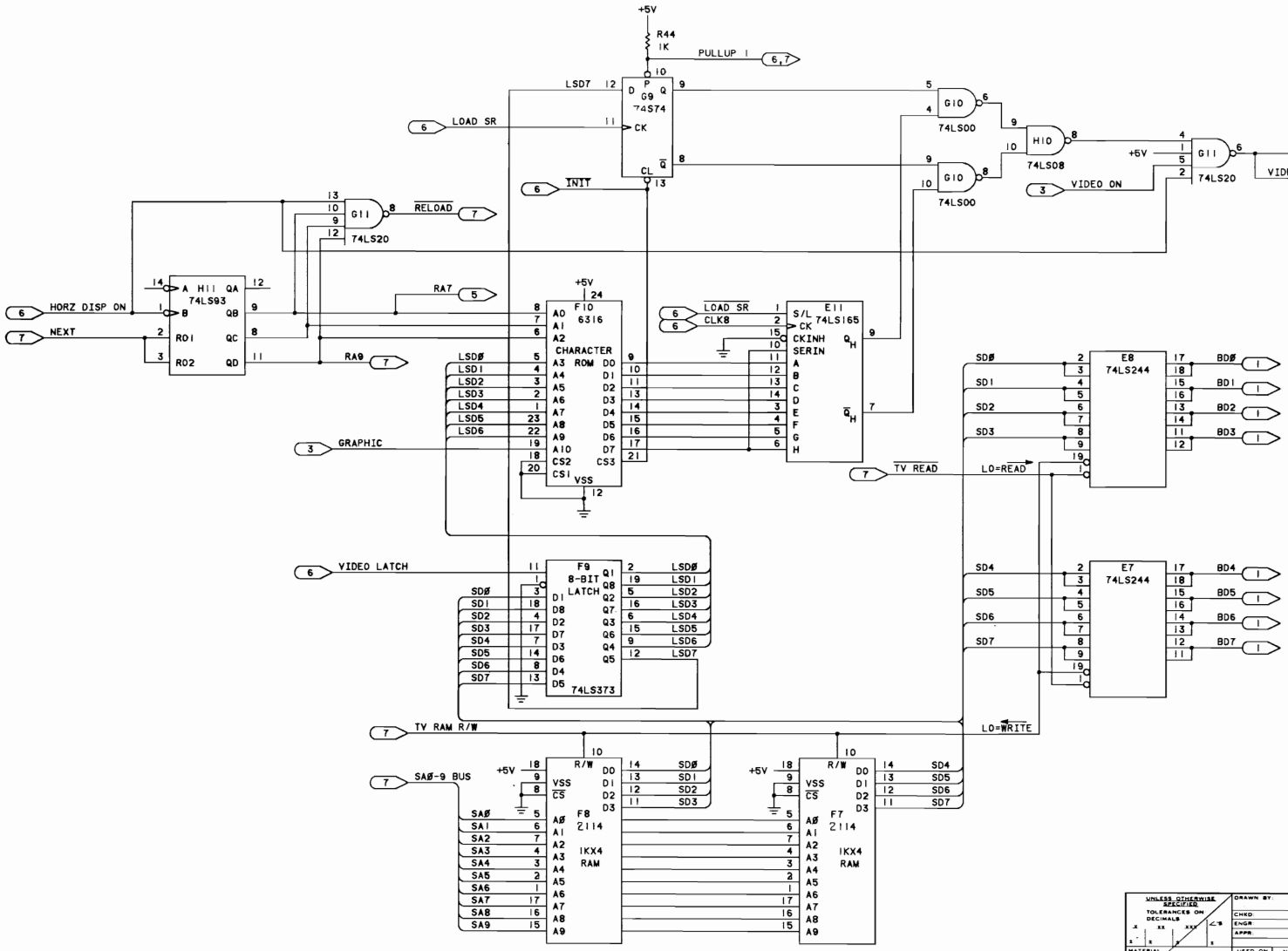

UNLESS OTHERWISE SPECIFIED TOLERANCES ON DECIMALS .X ± .XX ± .XXX ± ∠ ± MATERIAL FINISH

DRAWN BY: DATE CHKD: ENGR: APPR: USED ON NEXT ASSY

commodore

LOGIC DIAGRAM
DYNAMIC PET
DISPLAY RAMS

SIZE D 320349 REV E

SCALE — SHEET 8 OF 9

© BISHOP GRAPHICS/SCCUPRESS REORDER NO. A-1217

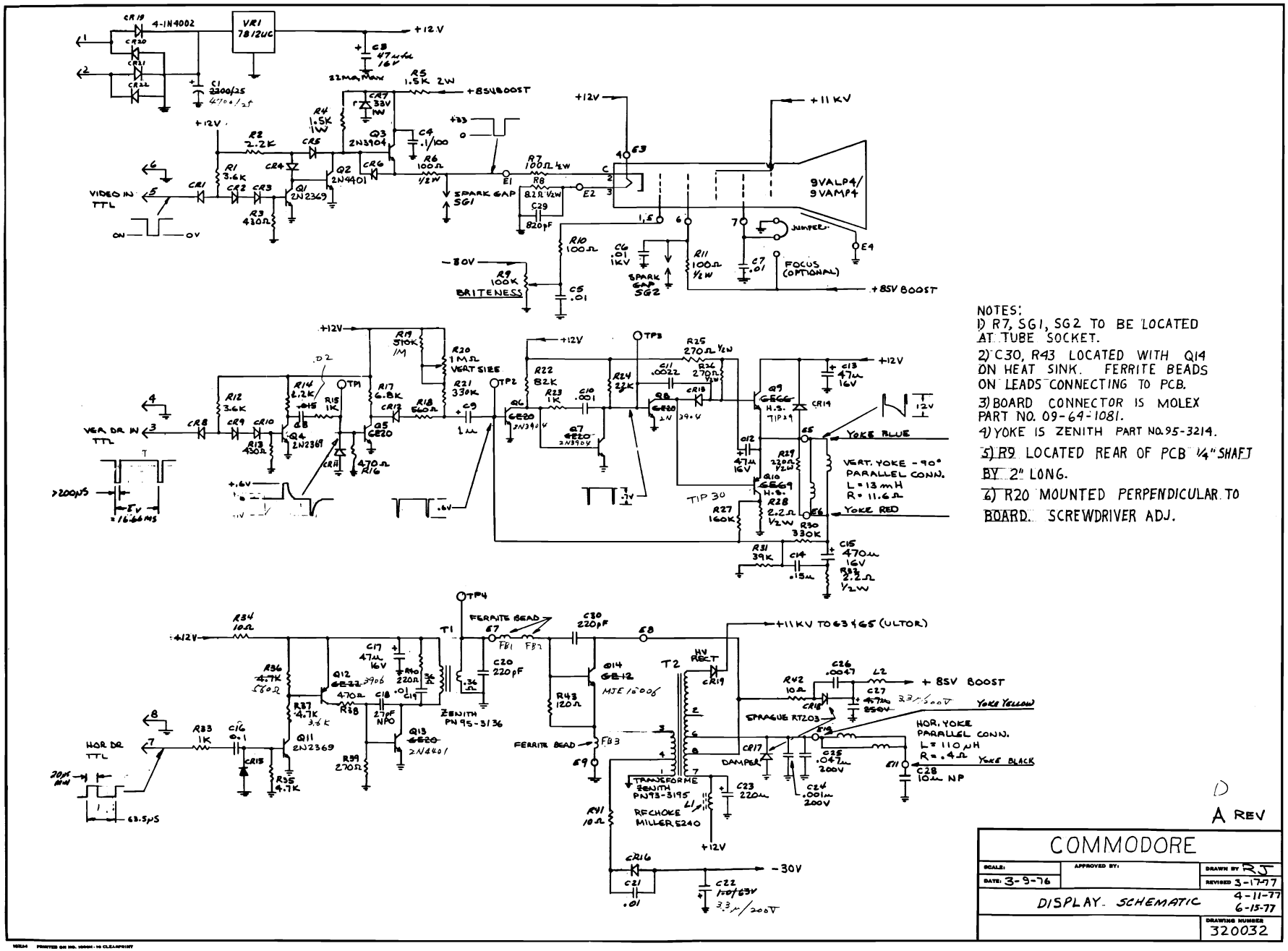

NOTES:
1) R7, SG1, SG2 TO BE LOCATED AT TUBE SOCKET.
2) C30, R43 LOCATED WITH Q14 ON HEAT SINK. FERRITE BEADS ON LEADS CONNECTING TO PCB.
3) BOARD CONNECTOR IS MOLEX PART NO. 09-64-1081.
4) YOKE IS ZENITH PART NO. 95-3214.
5) R9 LOCATED REAR OF PCB 1/4" SHAFT BY 2" LONG.
6) R20 MOUNTED PERPENDICULAR TO BOARD. SCREWDRIVER ADJ.

D

A REV

COMMODORE		
SCALE:	APPROVED BY:	DRAWN BY RJ
DATE: 3-9-76		REVISED 3-17-77
DISPLAY SCHEMATIC		4-11-77 6-15-77
		DRAWING NUMBER 320032